GATE OPERATOR

MASTER

-R -RF

DC MOTOR | **Up to 1200 kg** | **Speed 24 m/min**



500MASTER-R

DC sliding gate operator with encoder, complete with electronic control unit and built-in 433,92 MHz rolling code radio receiver. Speed up to 24 m/min. Max. gate weight 1200 kg.

500MASTER-RF

DC sliding gate operator with encoder, electromechanical limit switch, complete with electronic control unit and built-in 433,92 MHz rolling code radio receiver. Speed up to 24 m/min. Max. gate weight 1200 kg.



Accessories for MASTER series
Page 44



Further accessories:
Transmitters page 238
Photocells page 243
Flashing lights page 246

120 VOLT AVAILABLE

Professional APP

Family app

MADE IN ITALY

HIGH SPEED

Ready for a new challenge.

+130% SPEED

Percentage calculated in comparison with the 230 Volt version

PROTECT YOUR FAMILY

Closes the gate quickly to protect your family

INDUSTRIAL APPLICATIONS

For sliding gates up to 1200 kg

MASTER-R opening speed = 24 m/min

MASTER20 opening speed = 10,5 m/min

SAVES TIME

TECHNICAL DRAWINGS

Technical features	MASTER-R	MASTER-RF
Power supply	230V AC (50 - 60 Hz)	230V AC (50 - 60 Hz)
Motor power supply	24 V DC	24 V DC
Open circuit voltage	1,8 A	1,8 A
Power rating	360 W	360 W
Max. operating speed	24 m/min (opening) 14 or 24 m/min (closing)	24 m/min (opening) 14 or 24 m/min (closing)
Duty cycle	100 %	100 %
Operating temperature	-20° C ÷ +55° C	-20° C ÷ +55° C
Motor thermal protection	-	-
Degree of protection	IP 54	IP 54
Max. gate leaf weight	1200 kg	1200 kg
Max. weight cantilever gate leaf	840 kg	840 kg
Pinion module	4	4
Electronic control unit	K130MA	K130MA
Electromechanical limit switch	-	✓

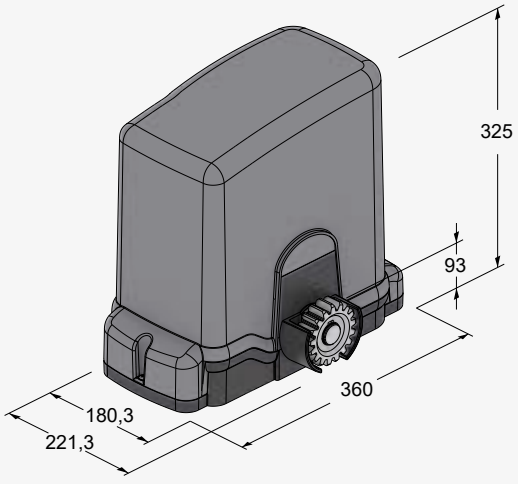

ACCESSORIES

COMMON ACCESSORIES



550CPMR
Adjustable counterplate from min. 65 mm to max 94 mm



550CPMR1
Adjustable counterplate from min. 124 to max 202 mm



550CPM
Counterplate



550CPM0020
Counterplate H 40 mm



400CFZ12
Steel rack 30x12, complete with screws (Module 4, max 2000 kg) Pack of 4 m



400CFZ22
Steel rack 22x22 (Module 4, max 3000 kg) 2 meter sections. Pack of 4 m



400FI
Adjustable hydraulic brake for sliding gates on a slope



400VSF20
Screws and brackets for 400CFZ22 (40 units per pcs)



900TWM
Master transceiver device **for central interface** (manages up to 4 TWC).



700BAP4
Gate stopper with spring



900TWC
Battery-powered wireless slave transceiver device **for mobile/fixed sensitive edge** with battery (manages up to max. 2 sensitive edges per TWC).



900BSD15
Deformable safety edge kit *l* = 1,5 m

900BSD20
Deformable safety edge kit *l* = 2 m



650ESE02
External emergency release device (flush-mounted) with tamper-proof housing and 4 m cable



900OPTIC
Set of infrared safety photocells, 12/24 V, surface mount, beam alignment adjustable up to 15°, up to 20 m range



C-CRT
Warning signal



900TOWERF
Photocell standard mounting post, painted aluminium, 49 cm, with removable cover for easy installation and photocell adjustment



C-TARG
Aluminium CE mark label, self adhesive

ACCESSORIES FOR 18/24 VOLT



200KB4 NEW
Battery charger and backup battery kit



900T-COMM
Interface for connecting 2 opposite sliding gate automation in master/slave mode



500MASTERKITFC NEW
Electromechanical limit switch kit for MASTER.



250T-WIFI
Device for Wi-Fi connection 2,4 GHz to allow the smartphone to remotely control and program the control units via TauApp

ACCESSORIES FOR 230/400 VOLT



600D703
230/400 V electronic control unit for one gate operator with electrical brake (MASTER20T)



900VLED-AT
230 V AC white led flashing light



250RXSM2
Self-learning, two-channel, 433,92 MHz plug-in radio receiver. Accepts up to 14 rolling code transmitters



750COL
Control unit mounting post

CHAIN VERSION

Upon request, the MASTER gearmotor is available with the pinion for chain transmission.

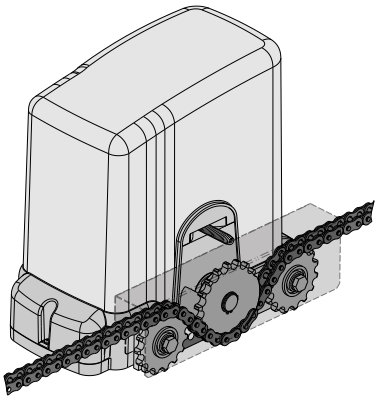

120 VOLT VERSION

120 VOLT AVAILABLE

Upon request, the MASTER gearmotor is also available in the 120 Volt version for foreign markets

Use and maintenance manuals

MASTER K130MA K590M D703