GATE OPERATOR

BIG

25QI

230 V | **Up to 2500 kg** | **Speed up to 19 m/min**



500BIG25QI

230 V three-phase sliding gate operator with built-in control unit with inverter. Max. gate weight 2500 kg.



Accessories for BIG series
Page 50



Further accessories:
Transmitters page 238
Photocells page 243
Flashing lights page 246

120 VOLT AVAILABLE

MADE IN ITALY

FEATURES:

• commercial use
• for gates up to 2500 kg
• three-phase 230 V operator
• mono-phase 230 V power supply
• soft start and soft stop
• adjustable opening and closing speed of the control unit and inverter
• oil bath vertical pinion operator
• painted steel housing
• manual release mechanism
• anti-crush adjustable mechanical clutch

PROS:

• suitable for large sliding gates
• higher torque and power thanks to the inverter technology
• self-ventilated operator for intensive use
• metal and bronze gears to increase endurance and reduce noise



UNLOCK
Thanks to the large handle, the unlocking maneuver is always feasible even for particularly heavy gates.



CLUTCH
Adjustable dry clutch, interposed between the motor and the reducer, for the safeguard of the mechanical parts in case of obstacles to gate movement.



ENGINE
The ventilated three-phase motor guarantees intensive use.



ELECTRONICS
The control unit with inverter allows to vary the speed and to program the acceleration and deceleration ramps.

TECHNICAL DRAWINGS

Technical features	BIG25QI
Power supply	230 V AC (50 - 60 Hz)
Motor power supply	230 V AC (three-phase)
Open circuit voltage	3 A
Power rating	1000 W
Max. operating speed	adjustable 5 ÷ 19 m/min
Duty cycle	100 %
Operating temperature	-20° C ÷ +55° C
Motor thermal protection	150° C
Degree of protection	IP 54
Max. gate leaf weight	2500 kg
Max. weight cantilever gate leaf	1750 kg
Pinion module	4
Electronic control unit	D820M

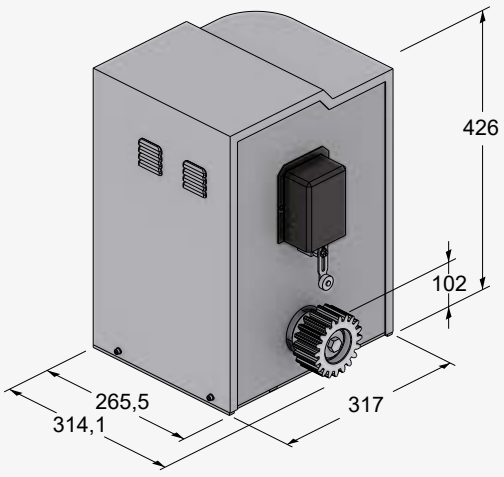

ACCESSORIES

BIG SERIES ACCESSORIES



400CP25
Counterplate for BIG25QI



400CP30
Counterplate for BIG40QI



550CFZ06
Steel rack 30x30 (Module 6, max 4000 kg) 2 meter sections. Pack of 10 m



M-ING0000Z12BIG
Pinion module 6 (BIG40QI)



400CFZ22
Steel rack 22x22 (Module 4, max 3000 kg) 2 meter sections. Pack of 4 m

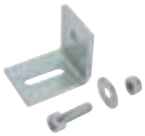

400VSF20
Screws and brackets for 400CFZ22 (40 units per pkg)



400PROFC
Galvanized rack attachment profile. 2 meter sections
Compatible with 400CFZ22



900BSD15
Deformable safety edge kit *l* =1,5 m

900BSD18
Deformable safety edge kit *l* =1,8 m

900BSD20
Deformable safety edge kit *l* =2 m

900BSD25
Deformable safety edge kit *l* =2,5 m



700BAP4
Gate stopper with spring



900TWM
Master transceiver device for **central interface** (manages up to 4 TWC).



900TWC
Battery-powered wireless slave transceiver device **for mobile/fixed sensitive edge** with battery (manages up to max. 2 sensitive edges per TWC).



250RXSM2B
Self-learning outdoor radio receiver, 433.92 MHz, two-channel, universal, to be wired with cable (14 code memory)



250SM126
Memory card for 126 radio codes



C-CRT
Warning signal



C-TARG
Aluminium CE mark label, self adhesive

BIG25QI TYPICAL SYSTEM

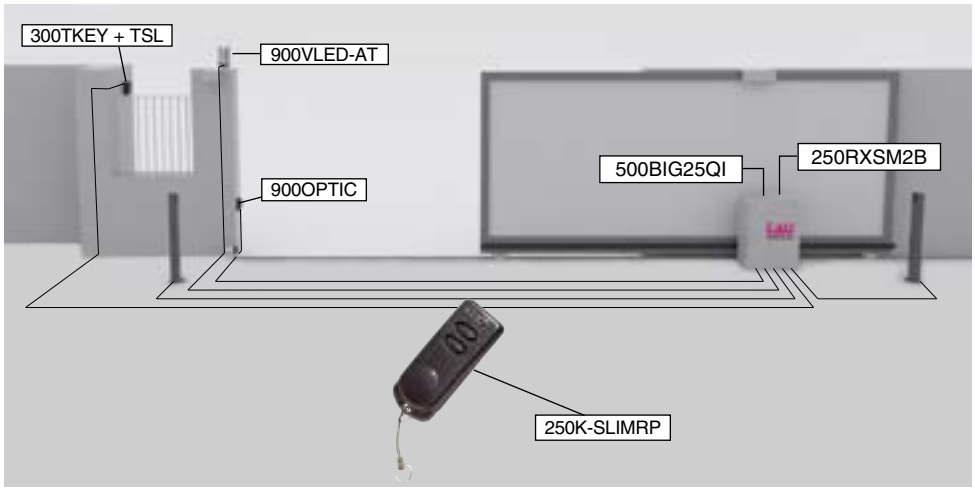

BIG40QI TYPICAL SYSTEM

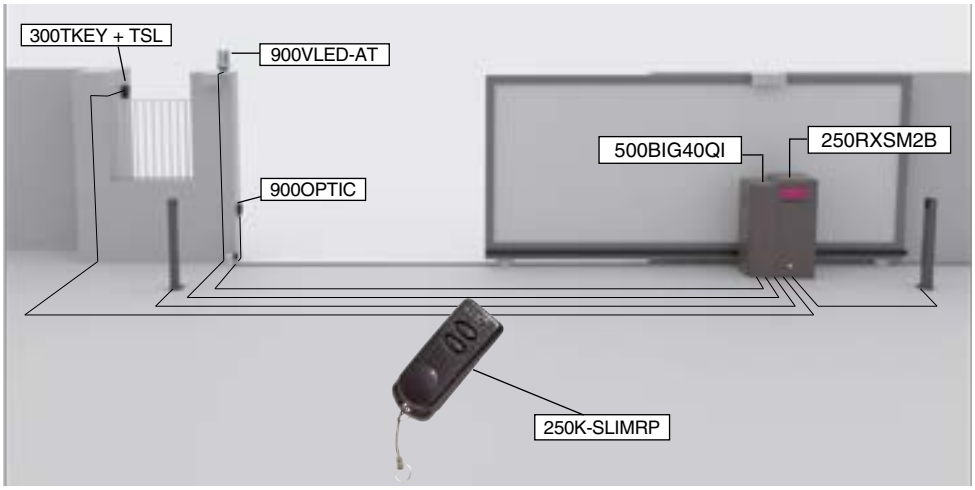

CHAIN VERSION

Upon request, the MASTER gearmotor is available with the pinion for chain transmission.

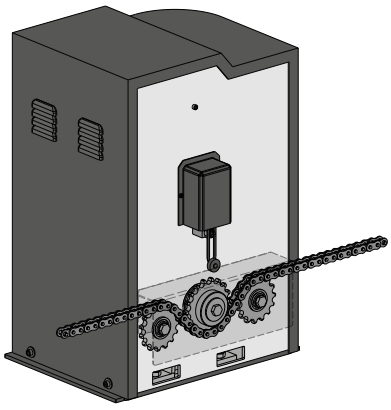

120 VOLT VERSION

120 VOLT AVAILABLE

Upon request, the BIG gearmotor is also available in the 120 Volt version for foreign markets

Use and maintenance manuals

BIG

D820M