Specifications

Power:
AC voltages: 100-240 VAC Frequency: 50-60 Hz
DC voltages: 12-24 VDC

Consumption:
AC: 25 W universal, 65 W panel & wall mount
DC: 25 W

Excitation Voltage:
10 ± VDC 8 x 350 Ω or 16 x 700 Ω load cells per A/D card

Analog Signal Input Range:
-45 mV to +45 mV

Analog Signal Sensitivity:
0,3 µV/graduation minimum at 7,5 Hz
1,0 µV/graduation recommended

A/D Sample Rate:
7,5 to 960 Hz, software selectable

Resolution:
Internal: 8 million counts
Display: Seven-digits

System Linearity:
± 0,01% full scale

Digital I/O:
Six I/O channels on CPU board; optional 24-channel I/O expansion boards available

Communication Ports:
Four ports on CPU board support up to 115.200bps
Port 1: Full duplex RS-232
Port 2: RS-232 with CTS/RTS; PS/2 keyboard interface via DB-9 connector or USB Type A and Type B connectors
Port 3: Full duplex RS-232, 20mA output
Port 4: Full duplex RS-232, 2-wire RS-485, 20mA output
Optional dual-channel serial expansion boards available
Channel A: RS-232, RS-485, 20 mA
Channel B: RS-232, 20 mA

Display:
(W x H) 116 mm x 86 mm, 320 x 240 pixel LCD module with adjustable contrast.
Transmissive display
Transflective display (optional)

Keys/Buttons:
27-key membrane panel, tactile feel, PS/2 or USB port for external keyboard connection

Temperature Range:
Certified: -10°C to +40°C
Operating: -10°C to +50°C

Weight:
Universal enclosure: 4 kg
Wall mount enclosure: 10 kg
Panel mount enclosure: 4 kg
Deep universal: 5 kg

Rating/Material:
NEMA Type 4X/IP66, stainless steel

Warranty:
Two-year limited warranty

EMC Immunity:
EN 50082 Part 2 IEC EN 61000-4-2, 3, 4, 5, 6, 8, and 11

Approvals:
NTEP CC 01-088, Class III/IIIL 10,000d
Measurement Canada AM-5426, Class III/III HD 10,000d
OIML approved 6,000/10,000, UK 2658
UL/cUL Listed (universal, deep and wall mount enclosure)
UL/cUL Recognized (panel mount)
UL/cUL Listed 508A (custom wall mount)
CE Marked



Approvals

OIML

CE

Standard Features

- Graphical, LCD display
- Selectable character sizes from 6 mm to 30 mm
- 60 configurable operator prompts
- Display up to four scale channels per screen with required Legal for Trade information
- 32 scale accumulators
- Ten programmable display screens
- Five softkeys with 10 user-defined keys or 14 preset functions per screen
- Millivolt calibration, 5-point linearization and geographical calibration
- NEMA Type 4X/IP66 stainless steel enclosure
- Selectable A/D measurement rate up to 960/second
- 100 setpoints, 30 configurable setpoint types
- Two slots for option cards
- 1,000-ID truck register for in/out weighing
- 64 K user on-board NV RAM
- User programmable 128 K flash memory
- Reflash memory to upgrade firmware
- Power for 16 (350 ohm) load cells per A/D board
- Local-remote indicators
- Multi range/interval
- Alibi storage
- Audit trail tracking
- Peak hold
- Rate of change

USB Standard Features

- USB interface card on Port 2
- USB replaces RS-232 and PS/2 interface

Connector Types:
- Standard Type A: 920i connects to keyboard, ASCII font label ticket printers and flash drives
- Standard Type B: 920i connects to PC

USB Interface Functions:
- Supports weigh mode and configuration mode functions
- Supports upload of databases and .920 configuration file
- Supports download of databases, .920 configuration file, iRite, COD file and firmware file
- Sanity checks for command errors

Flash Drives:
- Supports USB 2.0
- Create sub directories by unit ID and database name
- Use the root directory for generic files

Optional Washdown Connectors page 128
- Sealed receptacle mounted externally
- Sealed cables
- Receptacle covers

Additional models are available with the approvals shown here
Please consult the factory for part numbers.

Measurement Canada Approved

c UL us LISTED

c UL us

www.ricelake.eu | Phone: +31 (0) 26 472 1319

RICE LAKE

An ISO 9001 Registered Company © 2018 Rice Lake Weighing Systems 01/18 Prices and specifications subject to change without notice. Visit ricelake.eu for current prices.

920i® Series
Programmable Weight Indicator/Controller





920i Universal Part Number/Price

Part #	Description	USB	Est.Weight	Price
Single-Channel				
69522	230 VAC††		5 kg	Consult
120074	230 VAC††	USB	5 kg	Consult
107713 *	9-36 VDC, 25 watt		5 kg	Consult
120080 *	9-36 VDC, 25 watt	USB	5 kg	Consult
Dual-Channel				
69774	230 VAC††		5 kg	Consult
120096	230 VAC††	USB	5 kg	Consult
No A/D Channel				
77791	230 VAC††		5 kg	Consult
120104	230 VAC††	USB	5 kg	Consult

**DC/DC converter installed option, not UL approved or CE marked*

†† CEE 7/7 plug (Euro)

920i Deep Universal Part Number/Price

Part #	Description	USB	Est. Weight	Price
Single-Channel				
82459	230 VAC††		5 kg	Consult
120075	230 VAC††	USB	5 kg	Consult
107714 *	9-36 VDC, 25 watt		5 kg	Consult
120081 *	9-36 VDC, 25 watt	USB	5 kg	Consult
Dual-Channel				
82460	230 VAC††		5 kg	Consult
120097	230 VAC††	USB	5 kg	Consult
No A/D Channel				
93244	230 VAC††		5 kg	Consult
120105	230 VAC††	USB	5 kg	Consult

**DC/DC converter installed option, not UL approved or CE marked*

†† CEE 7/7 plug (Euro)

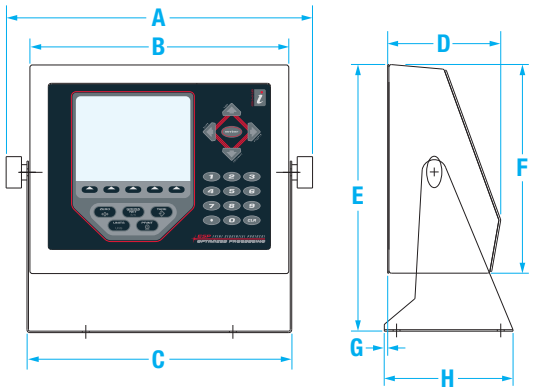

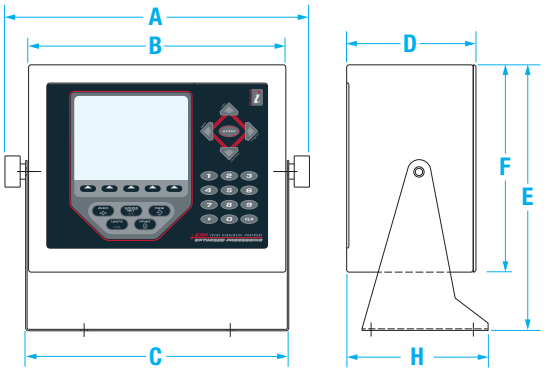

920i Universal Dimensions					
A	318 mm	D	117 mm	G	4 mm
B	268 mm	E	276 mm	H	206 mm
C	203 mm	F	216 mm		

920i Universal Dimensions					
A	318 mm	D	216 mm	F	216 mm
B	268 mm	E	61 mm	H	150 mm
C	203 mm				

An ISO 9001 Registered Company ©2018 Rice Lake Weighing Systems 01/18 Prices and specifications subject to change without notice. Visit ricelake.eu for current prices.





920i Wall Mount Part Number/Price

Part #	Description	USB	Est. Weight	Price
Single-Channel				
72133	230 VAC††		10 kg	Consult
120078	230 VAC††	USB	10 kg	Consult
107715 *	9-36 VDC		10 kg	Consult
120082 *	9-36 VDC	USB	10 kg	Consult
Dual-Channel				
72134	230 VAC††		10 kg	Consult
120098	230 VAC††	USB	10 kg	Consult
No A/D Channel				
77795	230 VAC††		10 kg	Consult
120106	230 VAC††	USB	10 kg	Consult

**DC/DC converter installed option, not UL approved or CE marked*

†† CEE 7/7 plug (Euro)

920i Panel Mount Part Number/Price

Part #	Description	USB	Est. Weight	Price
Single-Channel				
72137	230 VAC††		4 kg	Consult
120079	230 VAC††	USB	4 kg	Consult
107716 *	9-36 VDC		4 kg	Consult
120083 *	9-36 VDC	USB	4 kg	Consult
Dual-Channel				
72138	230 VAC††		4 kg	Consult
120099	230 VAC††	USB	4 kg	Consult
No A/D Channel				
77793	230 VAC††		4 kg	Consult
120107	230 VAC††	USB	4 kg	Consult

**DC/DC converter installed option, not UL approved or CE marked*

†† CEE 7/7 plug (Euro)

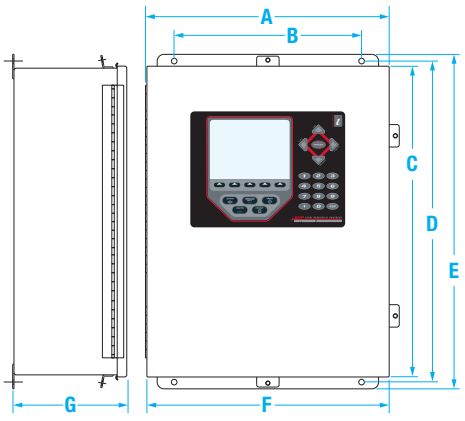

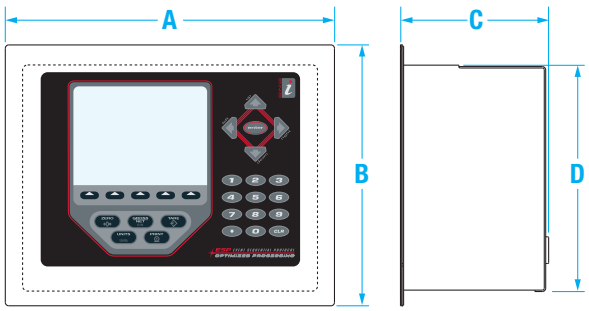

920i Wall Mount Dimensions					
A	363 mm	D	479 mm	F	356 mm
B	279 mm	E	499 mm	G	171 mm
C	457 mm				

920i Panel Mount Dimensions			
A	294 mm	C	132 mm
B	233 mm	D	202 mm

www.ricelake.eu | Phone: +31 (0) 26 472 1319

An ISO 9001 Registered Company © 2018 Rice Lake Weighing Systems 01/18 Prices and specifications subject to change without notice. Visit ricelake.eu for current prices.

920i® Series
Programmable Weight Indicator/Controller

Options/Accessories

Part #	Description	Price
Option Cards		
68532	A/D, single-channel	Consult
68533	A/D, dual-channel	Consult
67600	Memory, 1 MB NV RAM	Consult
67601	Digital I/O, 24-channel TTL output	Consult
67602	Analog output: selectable 0-10 V, 0-20 mA	Consult
103138	Analog output, dual-channel 0-10 V, 0-20 mA	Consult
67603	Pulse input, single-channel	Consult
67604	Serial port card, dual-channel, RS-232 and RS-485	Consult
87697	Analog input +/-10 VDC, 0-20 mA and thermocouple	Consult
Network Cards		
65383	Ethernet Thin Server (external)	Consult
71986	Ethernet TCP/IP 10/100 Base-T module (internal) page 155	Consult
98057	Ethernet TCP/IP, wireless LAN card 802.11 B/G page 155	Consult
87803	EtherNet/IP® page 155	Consult
68540	Profibus® DP page 154	Consult
187816	Profinet page 155	€692,00
Expansion Cards		
69782	Two-slot expansion board (wall mount)	Consult
71743	Two-slot expansion board (panel mount and deep universal)	Consult
179488	Two-slot expansion board (wall mount DC powered)	Consult
180047	Two-slot expansion board (deep universal and panel mount, DC powered)	Consult
69783	Six-slot expansion board (wall mount)	Consult
Hardware		
83569	Clear protective overlay (package of 5)	Consult
70056	Cable, DB9M to DB9F, Straight Cable	Consult
93359	Keyboard, QUERTY PS/2	Consult
99149	Keyboard, QWERTY 109-key USB, flexible, washable	Consult
77788	Fiber optic board, installed in 920i	Consult
19368	Start/stop controls without box, for use on wall mount	Consult
19369	Start/stop switch with FRP box	Consult
Manuals and Software		
69781	iRev™ scale software	Consult
72809	920i interchange® database software	Consult
67887	Additional installation manual	Consult
67888	Additional programming reference	Consult
Primary Component Parts		
186272 ***	CPU board assembly for LED backlight	Consult
186275 ***	Display board, LED back light, transmissive	Consult
186276 ***	Display board, LED back light, transflective	Consult
67613	AC power supply, 25 watt for universal	Consult
71333	Power supply, 65 watt for deep, panel and wall mount	Consult
132791	Power supply 12-24 VDC, 25 watt	Consult
66502	Switch panel membrane	Consult

****Design change in 2018 to LED backlight display. See replacement parts for CCFL backlight display and CPU board Rev N or older.*

The LED backlight display can be used with CPU board Rev N or older by replacing the power supply cable. PN 186464 for Universal, PN 186278 for Panel or Deep, PN 186760 for Wall mount.

Options/Accessories

Part #	Description	Connector Type				Price
USB Cable Options Note: Connector is a male plug		**Sealed**		**Un-sealed**		
		A	**B**	**A**	**B**	
79074	Unsealed connectors USB-A to USB-B, 2 m cable			X	X	Consult
124700	Sealed connectors, USB-A to USB-B, 3 m IP68 cable	X	X			Consult
126477	Sealed connector USB-A to unsealed connector USB-A, 3 m IP68 cable	X		X		Consult
124701	Sealed connector USB-A to unsealed connector USB-B, 3 m IP68 cable	X			X	Consult
124702	Sealed connector USB-B to unsealed connector USB-A, 3 m IP68 cable		X	X		Consult
124695	Panel plug 1.125 in diameter					Consult
USB Receptacles Note: Receptacle is a socket		**Sealed**		**Un-sealed**		
126476	Sealed receptacle USB-A for wall mount, 0.5 m cable	X		X		Consult
124703	Sealed receptacle USB-A to unsealed connector USB-B , 0.5 m cable	X			X	Consult
124704	Sealed receptacle USB-B to unsealed connector USB-B , 0.5 m cable		X		X	Consult
125998 *	Sealed receptacle USB-A to five-pin connector, 0.28 m cable (internal to 920i)	X				Consult
125999 *	Sealed receptacle USB-B to five-pin connector, 0.28 m cable (internal to 920i)	X				Consult
124694	Cover for sealed receptacles					Consult
124689	Cover for flash driver mounts on sealed receptacle					Consult
125077	Rice Lake USB flash drive, 1 GB					Consult
Ethernet Cables		**Sealed**		**Un-sealed**		
124706	Sealed to sealed, 3 m cable	X				Consult
124707	Sealed to unsealed connector, 3 m cable	X		X		Consult
Ethernet Receptacles		**Sealed**		**Un-sealed**		
126353 *	RJ-45 receptacle sealed, 0.28 m internal to 920i (requires Ethernet TCP/IP option installed)	X				Consult

**These options require a milled back plate which has two cutouts. If ordering only one receptacle, a plug (PN 124695) is required for the second cutout. USB enclosure parts with cutout: PN 119891 (Universal) PN 115118 (Universal Deep) PN 126585 (Wall Mount)*

Unsealed Connectors

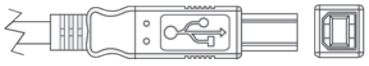

Type B

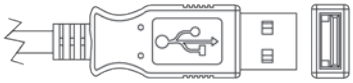

Type A

Sealed Connector

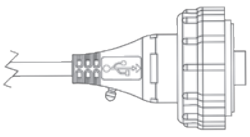

Sealed Receptacle

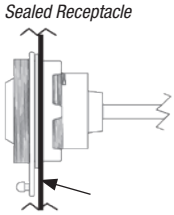

Backplate

An ISO 9001 Registered Company © 2018 Rice Lake Weighing Systems 01/18 Prices and specifications subject to change without notice. Visit ricelake.eu for current prices.



8-channel relay rack PN 52312

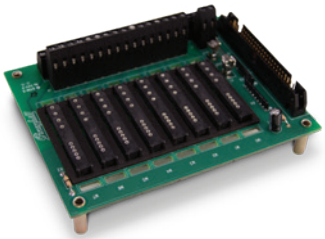

16-channel relay rack PN 52314

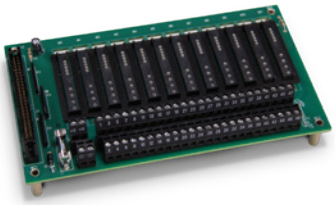

24-channel relay rack PN 52315

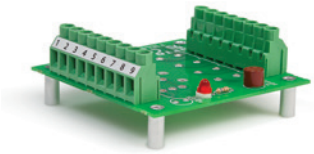

OPTO 22 G4 PN-15973



OPTO 22 G4 PN-45408

Grayhill Relays and Racks

Part #	Description	Price
52332	Two-channel input relay, 2,5-28 VDC	Consult
52318	Two-channel input relay, 120 VAC	Consult
52319	Two-channel input relay, 240 VAC	Consult
52331	Two-channel input relay, 10-32 VDC	Consult
52316	Two-channel output relay, 120-140 VAC at 2 amp	Consult
52317	Two-channel output relay, 240-280 VAC at 7 amp	Consult
71376	Two-channel output relay, 3-60 VDC at 1 amp	Consult
71377	Two-channel output relay, 0-200 VDC/VAC at 1,5 A/10 W (dry contact)	Consult
84698	Two-channel output relay, inductive load, 120-140 VAC at 2 A	Consult
84699	Two-channel output relay, inductive load, 240-280 VAC at 2 A	Consult
54215	Fuse, 3,15 amp, Grayhill	Consult
52312	Eight-channel relay rack, panel mount and wall mount, requires 50-Pin flat or round ribbon cable - 4 slots	Consult
52314	16-channel relay rack, panel mount and wall mount, requires 50-Pin flat or round ribbon cable - 8 slots	Consult
52315	24-channel relay rack, panel mount and wall mount, requires 50-Pin flat or round ribbon cable - 12 slots	Consult
46189	Jumper strap, 10 position for Grayhill	Consult
108396	Digital input 5 VDC, 15-30 VAC/10-32 VDC	Consult
108397	Digital output 5VDC, 3-60 VDC	Consult
70780	Cable, 50-Pin flat ribbon for digital I/O	Consult
70779	Cable, 50-Pin round ribbon for digital I/O with cord grip	Consult
72442	Cable, 50-Pin round ribbon for digital I/O without cord grip	Consult

OPTO 22 Relays and Racks

Part #	Description	Price
15969	G4IDC5 10-32 VDC input relay module, white (N/O)	Consult
15970	G40DC5R dry contact 100 VDC/1.5 A output, red (N/O)	Consult
22848	G40DC5R5 dry contact 100 VDC/1.5 A output, red (N/C)	Consult
15971	G40AC5 115 VAC output relay module, black (N/O)	Consult
15972	G4IAC5 115 VAC input relay module, yellow (N/O)	Consult
22847	G40AC5A5 115/230 VAC output relay module, black (N/C)	Consult
36632	G40AC5A 115/230 VAC output relay module, black (N/O)	Consult
36631	G4IAC5A 230 VAC input relay module, yellow (N/O)	Consult
16478	Quencharc arc suppressor	Consult
101923	FRP enclosure with Opto four-channel rack	Consult
15973	Four-channel relay rack, 83 x 83 mm	Consult
45408	Four-channel relay rack 155 x 30 mm	Consult
99032	Adapter plate, for four-channel Opto rack 33490	Consult
26834	Fuse, 1A 250V (for PN 15970 and PN 22848)	Consult
21735	Fuse, 4A 250V (for PN 15971, PN 22847 and PN 36632)	Consult

An ISO 9001 Registered Company © 2018 Rice Lake Weighing Systems 01/18 Prices and specifications subject to change without notice. Visit ricelake.eu for current prices.