TECHNICAL MANUAL
WEIGH INDICATORS

TRD & TRI/TRB/TRIKOMP: MULTIFUNCTIONAL WEIGHT INDICATORS





INDEX

1. REQUIREMENTS FOR AN EFFECTIVE INSTALLATION 3
2. CONNECTION TO THE LOAD RECEIVER (TRI) 4
3. TECHNICAL SET-UP 5
3.1 SCALE CALIBRATION 20
4. DISPLAY OF THE GEOGRAPHICAL UTILISATION AND CORRECTION ZONE OF THE WEIGHING ERROR DUE TO THE DIFFERENT GRAVITATIONAL ATTRACTION BETWEEN THE CALIBRATION AND UTILISATION ZONE 22
4.1 INDICATION AND/OR DISPLAY OF THE GEOGRAPHICAL UTILISATION ZONE (Compulsory for the legal type instruments) 22
4.2 CORRECTION OF THE WEIGHING ERROR INTRODUCED BY A DIFFERENT GRAVITATIONAL ATTRACTION VALUE BETWEEN THE CALIBRATION AND UTILISATION ZONE (compulsory for legal type instruments) 22
5. SERIAL OUTPUTS 23
5.1 PC SERIAL PORT (CoM PC) 23
5.2 PRINTER SERIAL PORT (CoMPrn) 23
5.3 DATA TRANSMISSION MODES OF THE PC SERIAL PORT 24
5.4 SERIAL COMMANDS FORMAT 25
5.4.1 SERIAL ERRORS 27
5.5 TRANSMISSION PROTOCOLS 28
6. PROGRAMMING THE PRINTOUTS 29
6.1 PROGRAMMING EXAMPLE 31
6.2 ASCII CODE TABLE 32
6.3 LIST OF PRINT BLOCKS 34
7. MOTHERBOARD AND SERIAL OUTPUTS CONNECTION DIAGRAM 40
7.1 I/O OPTIONAL EXPANSION CARD WITH 2 INPUTS AND 2 OUTPUTS 41

1. REQUIREMENTS FOR AN EFFECTIVE INSTALLATION

To obtain the best results it is recommended to install the indicator and the platform (or transducer) in a place with the following conditions:

A flat, level surface on which to rest

Stable and vibration free

Moderate temperature and humidity (15-30°C and 40-70%).

No dust or strong vapours

No draughts

Mains power supply is restricted to within ± 10% of the rated voltage

Make sure the platform is level or that the loading cells are resting evenly

Avoid welding with load cells installed.

When the load cells are used with assembling kits under storage bins or the like, connect the upper and lower supporting plate with a copper wire cable and then earth all the upper plates.

Use waterproof sheaths and couplings in order to protect the load cell cables.

Use a waterproof junction box to connect the cells.

The extension leads of the load cells or signal amplifiers must be screened. In addition they must be laid on their own in a raceway or metal pipe as far away as possible from the power supply cables.

Connection of the cell or amplifier cables on the electrical panel shall be independent and, if possible, connected directly to the KD/3590's terminal board without laying other cables in the raceway.

Install "RC" filters on the contactor coils, on the solenoid valves and on all devices producing electric disturbances.

If it is possible that condensation could form inside the weight transmitter it is advisable to leave the instrument powered at all times.

Electric protections (fuses etc.) are provided by the technician installing the instrument.

Everything not expressly described in this manual has to be considered as improper use of the equipment.

Do not install anywhere where there is the risk of explosion.

2. CONNECTION TO THE LOAD RECEIVER (TRI)

After having followed the instructions regarding the platform or the load receiver, the screened cable leading from the load cell(s) must be connected to the instrument through the CELL1 terminal board; see "MOTHERBOARD AND SERIAL OUTPUTS CONNECTION DIAGRAM".
The CELL1 terminal board of the indicator may be connected to the 6-wire load receiver (with use of SENSE), or simply 4-wire; for this, through jumper J1 and J2 it is possible to choose whether to short-circuit the SENSE with the POWER SUPPLY (jumpers closed) or not (jumpers open).
The sense allows compensating for any drops in voltage in the part of the cable that connects the instrument to the transducer. It is useful when the distance between the indicator and the transducer is greater than 10 m.
To make the connection qualified personnel must open the instrument (see terminal board connections – section 7).
Normally the indicator comes already connected to the platform and is ready to use. If this is a LEGAL version instrument, access to the connection will be subject to a legal SEAL.
Follow the instructions for preparing the platform for use.
If the weight converter is not connected the signal can go in underload or overload, in this case the instrument diplay "WAIT" for a few seconds and then "ERROR".

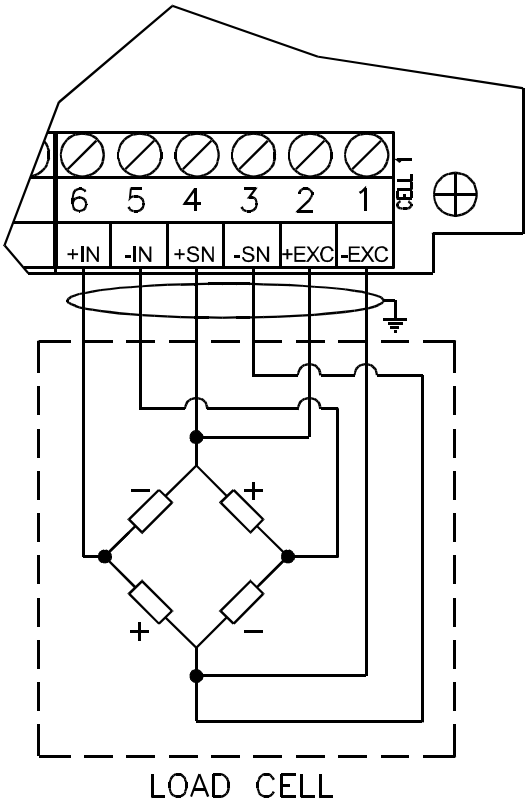

+ IN	SIGNAL +
- IN	SIGNAL -
+ SN	REFERENCE +
- SN	REFERENCE -
+ EXC	EXCITATION +
- EXC	EXCITATION -

See section 7 for further information.

Part reserved for Authorised Technical Personnel

3. TECHNICAL SET-UP

By “TECHNICAL SETUP" we mean a certain menu inside which all the indicator operating parameters can be set.
To enter it, turn on the instrument and, while the firmware version is displayed, press the TARE key for an instant (mod.TRD) or **ZERO/TARE** (TRB/TRI/TRIKOMP).
The indicator shows:

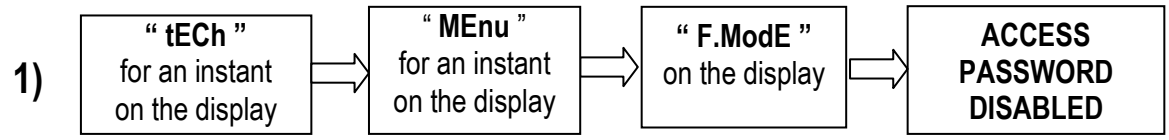

or

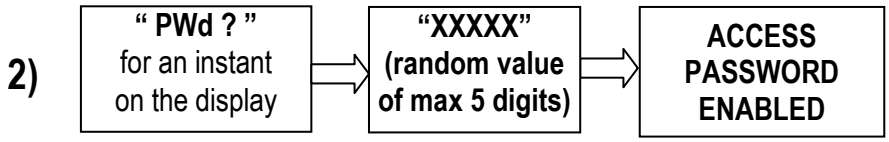

In the case that case 2) occurs and one wants to access the TECHNICAL SET-UP:

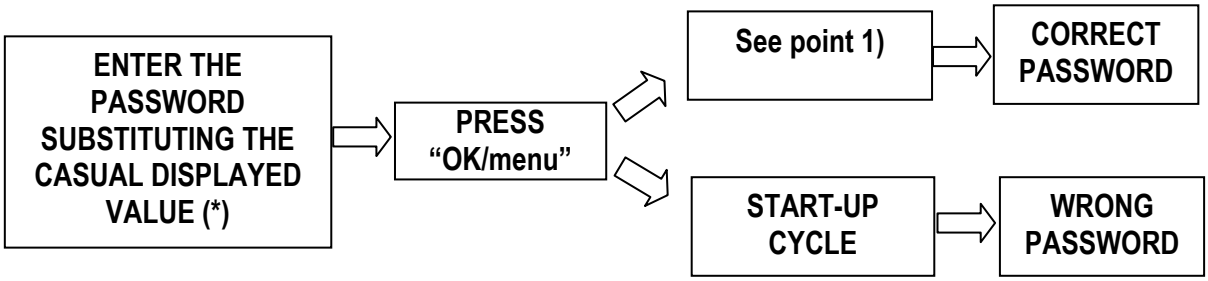

(*) If one has forgotten the password, one should comunicate the random number to the manufactureer, who will supply a valid password JUST FOR THAT SPECIFIC RANDOM NUMBER.
In order to enable the password, see step “**PWd-SEt.”,** described further on in the manual

In the parameter description and in the block diagram

- The **METRIC** parameters are shown with the **(*)** symbol**, and, with approved instrument, these may not be visible or read only. See the explanation of the parameter for the details.**
  NOTE: The indicator is approved when the J13 jumper (CAL) of the motherboard is open (see the electrical scheme in the final chapter).
- The **CONDITIONAL STEPS** are shown with the **(§)** symbol, **and are not displayed in specific condistions, shown in the step descritpion.**
- The **DEFAULT VALUES** are shown with the **(!)** symbol placed next to the step and at the end of it.

FUNCTION OF THE KEYS IN THE SET-UP ENVIRONMENT

TRD

KEY	FUNCTION
▲ ▼	Allow to scroll forwards and backwards in the menu steps or in the parameters inside a step In the numeric input phase they increase and decrease, respectivly, the digit to be modified.
OK/MENU	Allows to enter a step or to confirm a parameter inside a step.
C/Fn	Allows to exit a step without confirming any changes made and to go to the previous level
ZERO ◀ ▶ **TARE**	In the numeric input phase, they scroll respectively towards left and right the digit to be modified.

TRI

KEY	FUNCTION
▲ ▼	Allow to scroll forwards and backwards in the menu steps or in the parameters inside a step In the numeric input phase they increase and decrease, respectivly, the digit to be modified.
OK/MENU	Allows to enter a step or to confirm a parameter inside a step.
C/Fn	Allow to exit a step without confirming any changes made and to go to the previous level In case of numeric input, they allow to quickly zero the present value.
ZERO/TARE	In the numeric input phase, scrolls the digit to be modified.
NUMERIC KEYBOARD	Allow to make a numeric input

To exit the TECHNICAL SET-UP, press the **C** or **Fn** key many times until the indicator shows “SAVE?: confirm with **OK/menu** to save any changes made or press another key to not save.

BLOCK DIAGRAM

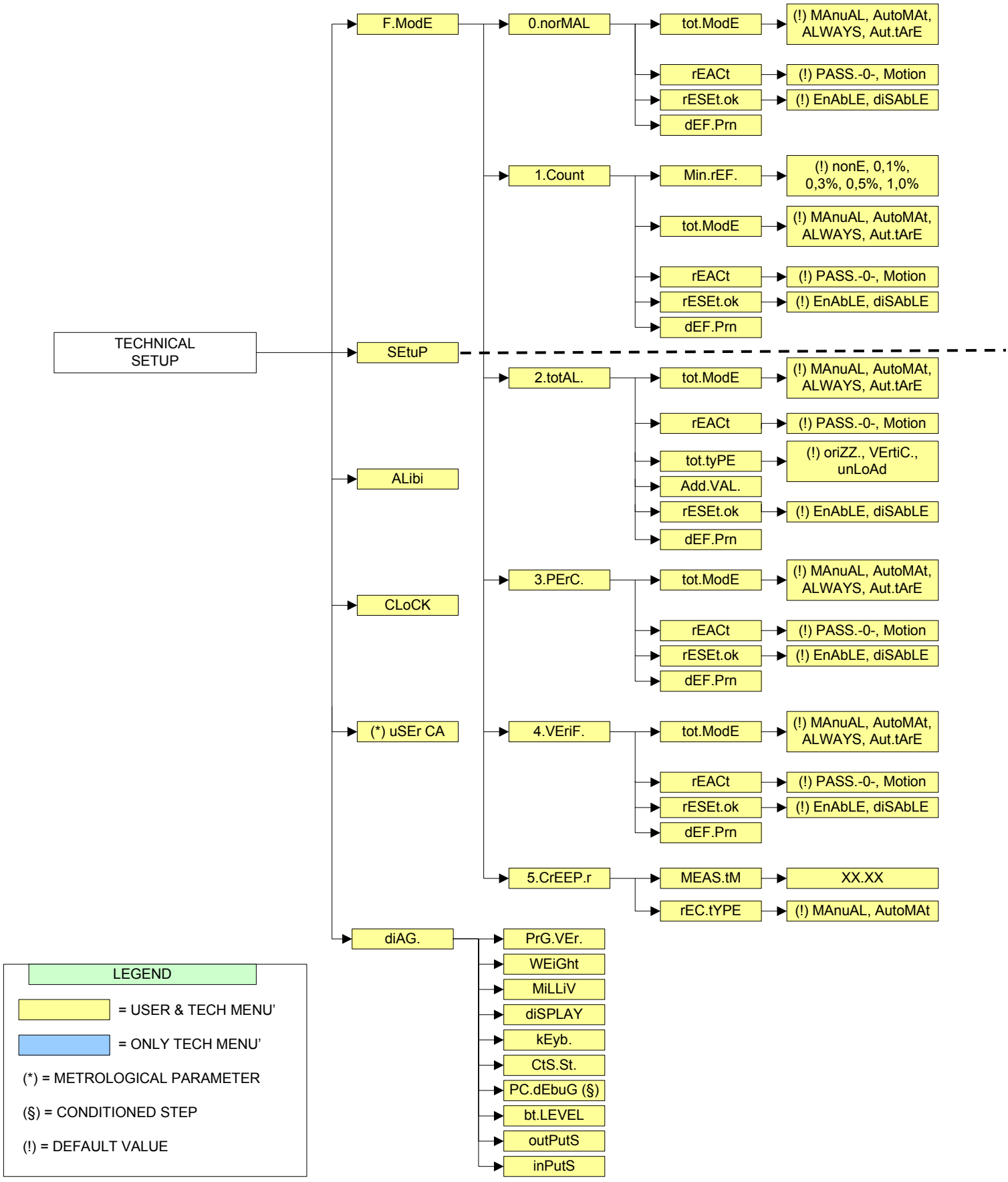

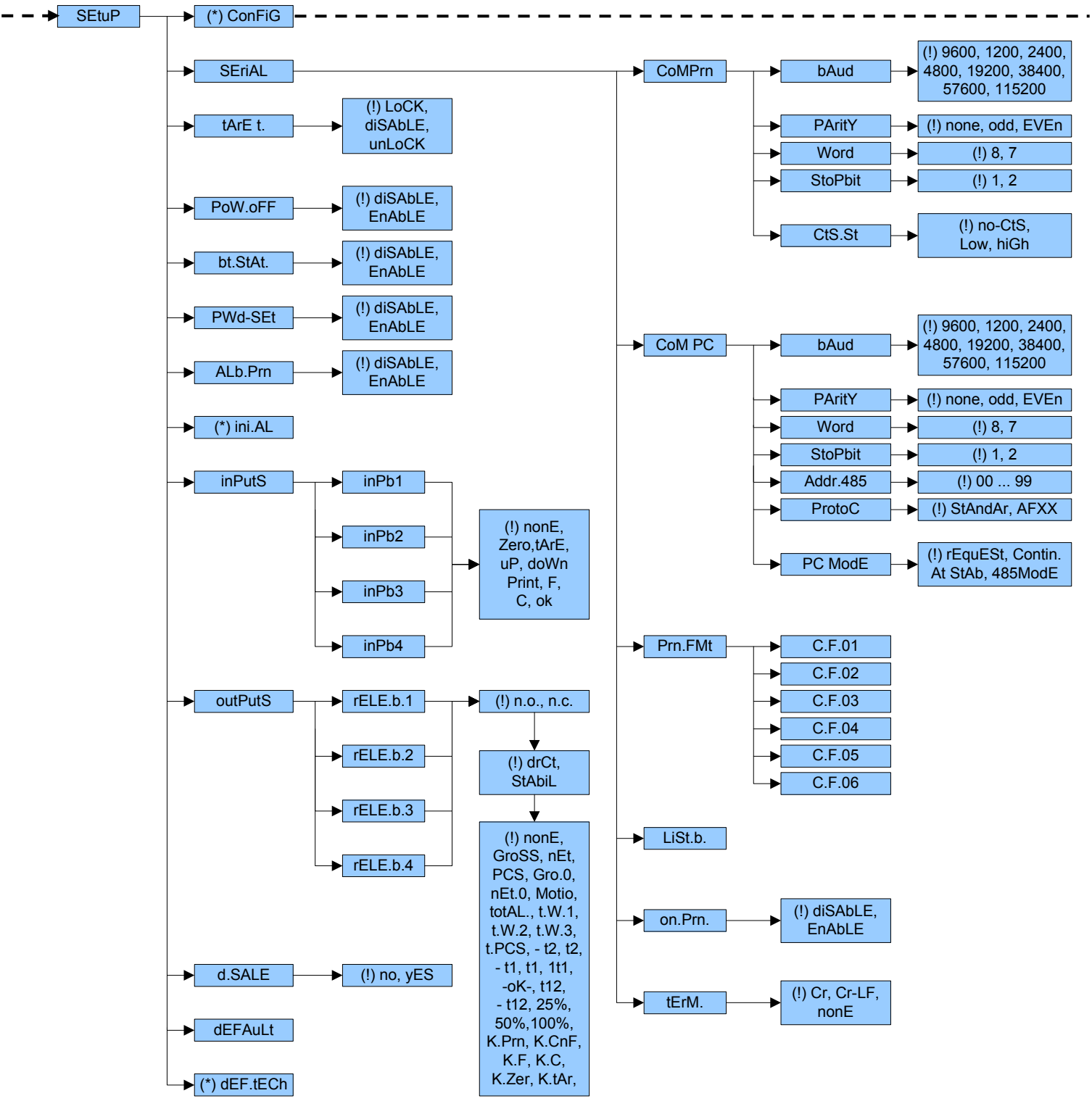
SEtuP
(*) ConFiG
SEriAL
CoMPrn
bAud
(!) 9600, 1200, 2400, 4800, 19200, 38400, 57600, 115200
PAritY
(!) none, odd, EVEn
Word
(!) 8, 7
StoPbit
(!) 1, 2
CtS.St
(!) no-CtS, Low, hiGh
tArE t.
(!) LoCK, diSAbLE, unLoCK
PoW.oFF
(!) diSAbLE, EnAbLE
bt.StAt.
(!) diSAbLE, EnAbLE
PWd-SEt
(!) diSAbLE, EnAbLE
ALb.Prn
(!) diSAbLE, EnAbLE
(*) ini.AL
CoM PC
bAud
(!) 9600, 1200, 2400, 4800, 19200, 38400, 57600, 115200
PAritY
(!) none, odd, EVEn
Word
(!) 8, 7
StoPbit
(!) 1, 2
Addr.485
(!) 00 ... 99
ProtoC
(!) StAndAr, AFXX
PC ModE
(!) rEquESt, Contin. At StAb, 485ModE
inPutS
inPb1
inPb2
inPb3
inPb4
(!) nonE, Zero,tArE, uP, doWn Print, F, C, ok
outPutS
rELE.b.1
rELE.b.2
rELE.b.3
rELE.b.4
(!) n.o., n.c.
(!) drCt, StAbiL
(!) nonE, GroSS, nEt, PCS, Gro.0, nEt.0, Motio, totAL., t.W.1, t.W.2, t.W.3, t.PCS, - t2, t2, - t1, t1, 1t1, -oK-, t12, - t12, 25%, 50%,100%, K.Prn, K.CnF, K.F, K.C, K.Zer, K.tAr,
Prn.FMt
C.F.01
C.F.02
C.F.03
C.F.04
C.F.05
C.F.06
LiSt.b.
on.Prn.
(!) diSAbLE, EnAbLE
tErM.
(!) Cr, Cr-LF, nonE
d.SALE
(!) no, yES
dEFAuLt
(*) dEF.tECh

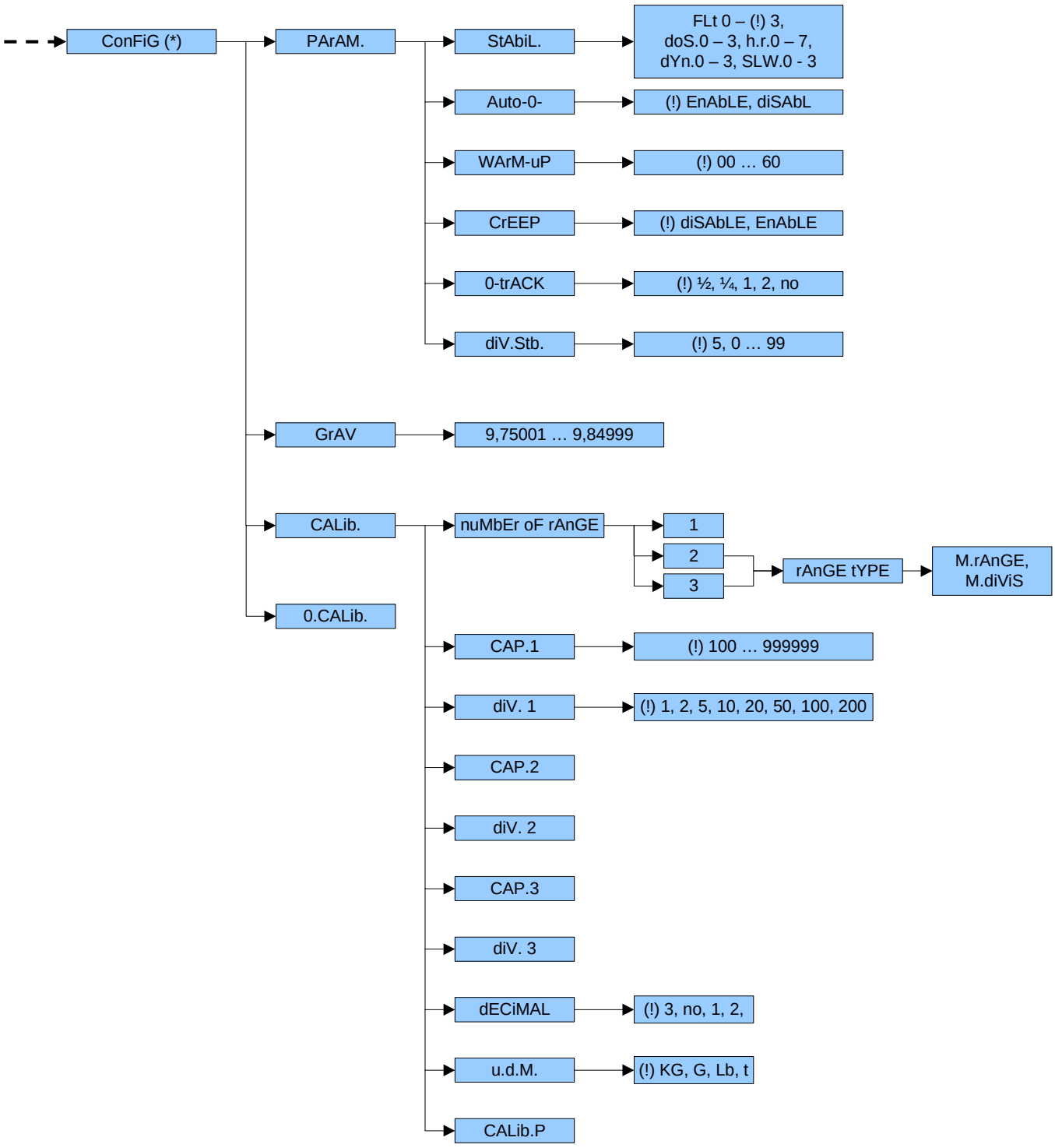
ConFiG (*)
PArAM.
StAbiL.
FLt 0 – (!) 3,
doS.0 – 3, h.r.0 – 7,
dYn.0 – 3, SLW.0 - 3
Auto-0-
(!) EnAbLE, diSAbL
WArM-uP
(!) 00 … 60
CrEEP
(!) diSAbLE, EnAbLE
0-trACK
(!) ½, ¼, 1, 2, no
diV.Stb.
(!) 5, 0 … 99
GrAV
9,75001 … 9,84999
CALib.
nuMbEr oF rAnGE
1
2
3
rAnGE tYPE
M.rAnGE,
M.diViS
0.CALib.
CAP.1
(!) 100 … 999999
diV. 1
(!) 1, 2, 5, 10, 20, 50, 100, 200
CAP.2
diV. 2
CAP.3
diV. 3
dECiMAL
(!) 3, no, 1, 2,
u.d.M.
(!) KG, G, Lb, t
CALib.P

F.ModE FUNCTIONING MODE

In this step one sets one of the following functioning modes:

0.norMAL SIMPLE DISPLAY MODE
1.Count COUNTING MODE
2.totAL. TOTALISER MODE
3.PErC. SAMPLE WEIGHT PERCENTAGE MODE
4.VEriF. +/- TOLERANCE VERIFICATION MODE
5.CrEEP.r MASS COMPARATOR AND CREEP RECORDING MODE

(!) 0.norMAL

Then one defines the details of the functioning mode previously selected.

** PARAMETERS COMMON TO ALL THE FUNCTIONING MODES ** (EXCEPT FOR MASS COMPARATOR AND CREEP RECORDING MODE)

tot.ModE AUTOMATIC/MANUAL TOTALISER

One sets the totalisation mode:
- **Auto** automatic upon weight stability.
- **MAnuAL** manual using the F2 key.
- **A.tArE** automatic with tare execution.
- **ALWAYS** manual, always active (does not influence the setting of the **F.ModE >> rEACt** step.)

(!) MAnuAL

rEACt REACTIVATIONS

It is possible to set whether to reactivate the printout and the totalisation with:
- PASSAGE BY ZERO OF THE NET WEIGHT **(PASS. 0)**
- WEIGHT INSTABILITY **(Motion)**.

(!) PASS. 0

rESEt.ok CONFIRM RESET

It is possible to select the automatic resetting of the totals when these are printed (**diSAbLE**) or the resetting upon request (**EnAbLE**).

(!) EnAbLE

dEF.Prn PRINT DEFAULT (NOT ACCESSIBLE)

Through this StEP the default printouts is enabled relative to the selected functioning mode
The printout default is valid only for TPR printer.

** ONLY FOR COUNTING MODE **

Min.rEF. MINIMUM SAMPLING WEIGHT PERCENTAGE

In this step one sets the minimum weight which must be put on the scale in order to make the reference operation:
- nonE: no check.
- 0.1%: the minimum weight for the reference must be greater than 0,1% of the set capacity
- 0.3%: the minimum weight for the reference must be greater than 0,3% of the set capacity
- 0.5%: the minimum weight for the reference must be greater than 0,5% of the set capacity
- 1.0%: the minimum weight for the reference must be greater than 1,0% of the set capacity

(!) nonE

** ONLY FOR TOTALISER MODE **

tot.tyPE TOTALISER TYPE

One sets the type of totalisation: horizontal (**oriZZ.**), vertical (**VErtiC.**) or totaliser in discharge (**unLoAd**).
(!) oriZZ.

Add.VAL. ADDITIONAL VALUE

It is possible to enter a value of up to 5 digits which is summed upon each totalisation. The same value is linked independently to the three total types; in other words, it is possible to print three different additional values (see "6.3 LIST OF PRINT BLOCKS" section; blocks 335, 336, 337) which will be reset upon the resetting of the relative total.
(!) 0

** ONLY FOR MASS COMPARATOR AND CREEP RECORDING MODE **

Only for TRIKOMP version

MEAS.tM MEASURE TIME OF THE COMPARATOR

The step allows to set measure time for weight creep.
NOTE: MAX = 99(minutes).59(seconds); MIN = 00.00
(!) 00.00

rEC.tYPE RECORD TYPE OF THE COMPARATOR

The step decides to manually **(ManuAL)** or automatically **(AutoMAt)** record weight when measure time set in the previous step passes away.
(!) ManuAL

SEtuP SCALE CONFIGURATION

ConFiG METRIC PARAMETERS

PArAM. METRIC PARAMETERS

StAbiL *FILTERING INTEGRATION*

By pressing the **OK/menu** key one accesses the selection of the type and degree of filter intervention for the stability of the weight indication:

FLt 0 – 3	filter for simple weighing
h.r.0 – 1	filter for high resolution
dYn.0 – 1	filter for weight in movement (i.e. weighing animals)
doS.0 – 3	filter for dosage
SLW.0 – 3	filter for weight rather unstable
h.r.2 – 7	filter for high resolution
dYn.2 – 3	filter for weight in movement (i.e. weighing animals)

The higher the filter value, and greater is its intervention relative to the type of filter used.
(!)FLt 3
(*) In case of approved instrument, one can select only: FLt 0…3, **h.r.0, h.r.1, dYn.0**, **dYn.1.**

Auto-0 *AUTOZERO AT THE START UP*

By pressing **OK/menu** one chooses whether to enable (**EnAbLE**) or disable (**diSAbLE**) the automatic acquisition of the gross zero upon start-up. By choosing **EnAbLE**, the zero is acquired as long as at start-up the zero value that is on the plate is not greater than 10% of the scale capacity.
NOTE: With APPROVED instrument, if the indicator can not zero the weight on the scale, the display shows ZErO indefinitely, until the weight does not return into a zeroable range.
(!) EnAbLE

WArM – UP *WARM-UP PHASE*
It is possible to set a time in which, during the start-up phase, a brief preheating is made of the instrument electronics, in order to optimize the weighing.
The 00 value disables the function.
NOTE: tMin = 00 sec.; tMAx = 60 sec.
(!) 00
(!) 30 for TRIKOMP mod.

CrEEP *CREEP COMPENSATION*
For the manufacturer's use.
(!) diSAbLE
(!) EnAbLE for TRIKOMP mod.

0-trACk *ZERO TRACKING*
This menu allows setting the zero tracking, in other words, the compensation parameter of the scale's thermal drift; the set value corresponds to the number of divisions that is reset in the fixed time of 1 second.
tr. ¼ +/- one fourth of a division
tr..½ +/- half division
tr. 1 +/- one division.

tr. 2 +/- two divisions.
tr. no tracking disabled.
(!) tr. ½
(*) In case of approved instrument one can change only to: disabled, 1/4 e 1/2.

(*) diV.Stb DIVISIONS BY STABILITY
In this step one enters the number of divisions by which the instrument detects the weight stability; the higher the number of divisions, less is the sensitivity, and consequently the stability is more easily detected. The possible values are 0…99.
(!) 5
(*) In case of approved instrument the parameter is read only.
Note: the 0 value disables the checking.

GrAV GRAVITY ZONE AND ZONE OF USE
Through this step one selects the acceleration value **of calibration and of use** of the instrument:

Manual entry of the g value: one may manually enter the gravitational acceleration value; **one must modify the 6 decimal digits of the gravitational acceleration.**

In case one enters a wrong g value: the minimum decimal value is suggested (9,75001); a wrong value is any decimal number that is not between 9,75001 and 9,84999 (inclusive).

(!) g = 9,80655

(*) With approved instrument the parameter is read-only.

CALib. SCALE CALIBRATION
See paragraph "3.1 SCALE CALIBRATION".

0.CALib. ZERO CALIBRATION
See paragraph "3.1 SCALE CALIBRATION".

SEriAL SERIALS, PRINTOUTS, ETC…

CoMPrn CONFIGURATION OF PRINTER SERIAL

bAud *SET BAUD RATE*

By pressing the **OK/menu** key one accesses the selection of the data transmission speed (measured in Baud = bit/second).
The possible values are: 1200, 2400, 4800, 9600, 19200, 38400, 57600, 115200.
(!) 9600

PAritY *SET PARITY*

By pressing the **OK/menu** key one accesses the selection of the parity bit type. The possible values are: nonE (absent parity bits), odd (uneven parity bits) e EVEn (even parity bits).
(!) nonE

Word *SET WORD*

By pressing the **OK/menu** key one accesses the selection of the number of data bits. The possible values are: 8 (8 data bits) and 7 (7 data bits).
(!) 8

StoPbit *SET STOP BIT*

By pressing the **OK/menu** key one can then select the number of stop bits. The possible values are: 1 (1 stop bit) and 2 (2 stop bits).
(!) 1

CtS.St. SYNCHRONISM SIGNAL

The indicator has a CTS input (Clear To Send). A device (like a printer) that is slow in processing the data received, can interrupt the transmission temporarily using this signal.
It is possible to select:

no-CtS	no signal	
LoW	CTS active low	(LP542PLUS, EPSON LX300, TM295,TPR)
hiGh	CTS active high	(DP190)

(!) no-CtS

CoM PC PC SERIAL CONFIGURATION

bAud *SET BAUD RATE*

By pressing the **OK/menu** key one accesses the selection of the data transmission speed (measured in Baud = bit/second).
The possible values are: 1200, 2400, 4800, 9600, 19200, 38400, 57600, 115200.
(!) 9600

PAritY *SET PARITY*

By pressing the **OK/menu** key one accesses the selection of the type of parity bits. The possible values are: nonE (absent parity bits) odd (uneven parity bits) and EVEn (even parity bits).
(!) nonE

Word *SET WORD*

By pressing the **OK/menu** key one accesses the selection of the number of data bits. The possible values are: 8 (8 data bits) and 7 (7 data bits).
(!) 8

StoPbit *SET STOP BIT*

By pressing the **OK/menu** key one can then select the number of stop bits. The possible values are: 1 (1 stop bit) and 2 (2 stop bits).
(!) 1

Add.485 *485 ADDRESS*
By pressing the **OK/menu** key one accesses the insertion of a code of 2 digits which identify the instrument among those connected in the RS485 transmission mode, on the PC serial port.
(!) 00

ProtoC SELECTS PROTOCOL
Here one decides the format of the data transmission through the PC serial line:
StAndAr First type of transmission protocol (see section 5.5 – "TRANSMISSION PROTOCOLS").
AFXX Second type of transmission protocol (see section 5.5 – "TRANSMISSION PROTOCOLS").
(!) StAndAr

PC.ModE TRANSMISSION TYPE
In this submenu one selects the data transmission mode of the PC serial port:
rEquE. On request
Contin. Continuous
At StAb On stability
485ModE 485 mode
For the transmission mode specifics, see section 5.3 – "DATA TRANSMISSION MODES OF THE PC SERIAL PORT".
(!) rEquESt

Prn.FMt PRINT CONFIGURATION
Through this step one can configure the print formats directly from the indicator.
C.F. 01 FORMATTING OF THE PRINT KEY.
C.F. 02 FORMATTING OF TOTALIZATION.
C.F. 03 FORMATTING PARTIAL TOTAL.
C.F. 04 FORMATTING GENERAL TOTAL.
C.F. 05 FORMATTING GRAND TOTAL.
C.F. 06 FORMATTING FIRST TOTALISATION HEADING.

In regards to the print programming see the section 6 – "PROGRAMMING THE PRINTOUTS".

LiSt.b. PRINTING OF BLOCK LIST
Confirm with **OK/menu** if you print the complete list of the available print blocks (see section 6.3 - "LIST OF PRINT BLOCKS").

on.Prn. PRINTER ENERGY SAVING
If the indicator is connected to a printer in "energy saving" mode, one should set "EnAbLE"; in this way at the beginning of each printout, the characters which cause the printer to turn on, will be transmitted.
(!) diSAbLE

tErM. SET TERMINATOR TYPE
When connecting a printer it is often necessary to transmit one of the following protocols in order to define the end of the print line:
Cr CR (per for TPR, LP542PLUS)
Cr-LF CR LF (for EPSON LX300 and TMU295).
nonE NO TERMINATOR
(!) Cr

tArE t. TARE LOCK/UNLOCK

LoCK LOCKED TARE
diSAbLE DISABLED TARE
unLoCK UNLOCKED TARE
See the section "5.3 TARE LOCKED/UNLOCKED" in the user manual for the functioning specifics.
(!) LoCK

PoW.oFF AUTO SWITCH-OFF

One enables/disables the auto switch-off after about 5 minutes of not using it, with plate unloaded.
diSAbLE auto switch-off DISABLED
EnAbLE auto switch-off ENABLED
(!) diSAbLE

bt.StAt. BATTERY STATUS

One selects whether to enable or disable the software check of the battery charge level: each time that the charge goes down of a level, it is notified through the “bt X” message (in which X is the charge level from 1 to 9) and by an acoustic signal.
EnAbLE check ENABLED
diSAbLE check DISABLED
(!) diSAbLE

PWd-SEt ENABLING PASSWORD

One sets whether to enable or disable the access password to the TECHNICAL SET-UP:
EnAbLE password ENABLED
diSAbLE password DISABLED
By selecting EnAbLE, the instrument predisposes itself for the password entry, made up of up to 5 digits; when finished entering confirm with **OK/menu**.
TAKE NOTE: The maximum enterable value is 65534.
(!) diSAbLE

ALb.Prn STORING UPON ALIBI MEMORY WITH PRINT KEY

If the indicator is fitted with the alibi memory option by setting “EnAbLE” it is possible to store a weigh (and transmit the relative data) with the PRINT key; see the “12 ALIBI MEMORY (OPTIONAL)” section of the user manual for the operating details.
(!) diSAbLE

ini.AL INITIALIZES ALIBI MEMORY

The initialisation cancels all the data stored in the Alibi memory; by pressing **OK/menu** one is asked to confirm the operation: the display shows **SurE?**; press **OK/menu** again to confirm or another key to cancel.
At the end the " AL.OK " message appears if the operation is made with success; otherwise the " AL.ERR" message is displayed.
NOTE: It is not possible to make the initialisation on an approved instrument**.**

(*) In case of approved instrument the parameter is not visible.

inPutS INPUT CONFIGURATION

The indicator can have up to 4 inputs (with option) which may take on the meaning of a specific function key, among those available; it is therefore possible to emulate a few keys through the corresponding input.

inPb1 INPUT 1
nonE NO INPUT
ZEro ZERO KEY
tArE TARE KEY
uP ⇑ KEY
doWn ⇓ KEY
Print PRINT KEY
F F KEY
C C KEY
oK OK/menu KEY
(!) nonE

The same configurations are valid for:
inPb2 INPUT 2
inPb3 INPUT 3
inPb4 INPUT 4

If the I/O board is not installed, or if it's not detected by the indicator because it's defective, when the "inPutS" step is confirmed, the following error message "in out not PrESEnt" will appear.

outPutS OUTPUT CONFIGURATION

Upon request, the indicator can have up to 4 relay outputs; in this step one configures the normal status of the relay, the switching condition and the functioning mode.
See the "11 SETPOINT FUNCTION" section in the user manual for the functioning mode specifications.

rELE.b.1 RELAY 1
By pressing **OK/menu** one sets:
- sets the status of the relays after the instrument start-up normally open (no) o normally closed (nC).
  NOTE: with indicator turned off, the status of the relays is normally open.
  (!) no

- By pressing **OK/menu** one sets the relay activation condition:
  dirECt DIRECT: the relay is activated as soon as the weight reaches the set threshold, (independently from the stability).
  At StAb UPON STABILITY: the relay is activated in the moment in which the weight, after reaching the set activation thresholds, becomes stable.
  Note: The switching condition is always direct in the functioning of relays 12 to 28.
  (!) drCt

- By pressing **OK/menu** one sets the relay functioning mode with or without hysteresis:
  iSt.on functioning with hysteresis
  iSt.oFF functioning without hysteresis
  (!) iSt.oFF

- By pressing **OK/menu** one sets the relay functioning mode:

0 nonE	NO FUNCTIONING (disabled relay)
1 GroSS	SETPOINT ON THE GROSS WEIGHT
2 nEt	SETPOINT ON THE NET WEIGHT
3 PCS	SETPOINT ON THE PIECES NUMBER (only for counting)
4 Gro.0	GROSS WEIGHT AT 0.
5 nEt.0	NET WEIGHT AT 0.
6 Motio	INSTABILITY.
7 totAL	TOTALISATION.
---	---
8 t.W.1	PARTIAL TOTAL + net weight on the scale (only for totalizer mode).
9 t.W.2	GENERAL TOTAL + net weight on the scale (only for totalizer mode).
10 t.W.3	GRAND TOTAL + net weight on the scale (only for totalizer mode).
11 t.PCS	PIECES TOTAL (only for counting mode)
---	---
12 – t2	WEIGHT < TARGET – T2 (only for Tolerance Check mode)
13 t2	WEIGHT > TARGET + T2 (only for Tolerance Check mode)
14 – t1	TARGET –T2 < WEIGHT < TARGET - T1 (only for Tolerance Check mode)
15 t1	TARGET +T1 < WEIGHT < TARGET + T2 (only for Tolerance Check mode)
16 1t1	TARGET –T1 < WEIGHT < TARGET + T1 (only for Tolerance Check mode)
17 –oK-	WEIGHT OK (only for Tolerance Check mode)
18 t12	WEIGHT > TARGET + T1 (only for Tolerance Check mode)
19 - t12	WEIGHT < TARGET - T1 (only for Tolerance Check mode)
---	---
20 25%	WEIGHT PERCENTAGE > = 25% (only for Percentage mode)
21 50%	WEIGHT PERCENTAGE > = 50% (only for Percentage mode)
22 100%	WEIGHT PERCENTAGE > = 100% (only for Percentage mode)
---	---
23 K.Prn	PRINT KEY
24 K.CnF	OK/menu KEY
25 K.F	F KEY
26 K.C	C KEY
27 K.ZEr	ZERO KEY (TRD) or ZERO/TARE for a few seconds (TRB/TRI/TRIKOMP)
28 K.tAr	TARE KEY (TRD) or ZERO/TARE for an instant (TRB/TRI/TRIKOMP)

(!) 0 nonE

The same configurations are valid for:
rELE.b.2 RELAY 2
rELE.b.3 RELAY 3
rELE.b.4 RELAY 4

If the I/O board has not been installed, or if it has not been detected by the indicator because it is defective, when the "outPutS" step is confirmed, the "in out not PrESEnt" erro message will appear

d.SALE DIRECT SALE (*)

For special needs, it is possible to limit the tare functions **with an approved instrument**; by setting "YES", the tare operations will have the following features:

- The SEMIAUTOMATIC TARE value can not be modified with a manual tare or from database.
- The manual tare or from database can be entered or modified only with an UNLOADED scale.

(!) no

(*) In case of approved instrument the parameter is not visible.

dEFAuLt STANDARD DEFAULT

By pressing **OK/menu** the indicator activates the default parameters, (shown in bold and preceded by the exclamation point at the end of each step); the display shows **SurE?**: press **OK/menu** to confirm or another key to cancel the operation.
NOTE: THE CALIBRATION IS NOT CANCELLED.

(*) dEF.tECh TECHNICAL DEFAULT

By pressing **OK/menu** the indicator activates the default parameters (shown in bold and preceded by an exclamation point at the end of each step), the standard printouts of the previously selected functioning mode, **cancels THE CALIBRATION**; the display shows **SurE?**: press the **OK/menu** key to confirm or another key to cancel the operation.
(*) In case of approved instrument the parameter is not visible.

ALibi ALIBI MEMORY READING

See the “12 ALIBI MEMORY (OPTIONAL)” section in the user manual.

CLoCK SETTING OF DATE AND TIME

In this step one sets the date and time of the indicator; by pressing **OK/menu** one will be asked to enter the DAY, MONTH, YEAR, HOUR, MINUTES in this order.
The entry of each parameter must be confirmed with **OK/menu**.
NOTE: If the indicator is not fitted with the time/date or the Alibi Memory (both optional), when entering the step the “CloCK not PrESEnt” message will appear.

(*) uSEr CA USER CALIBRATION

See the “14.1 USER CALIBRATION” paragraph in the user manual.

diAG. DIAGNOSTICS MENU

It is a submenu inside which it is possible to check the software components and the scale hardware.

PrG.VEr. FIRMWARE

Software version check.

WEiGht WEIGHT

Checking of the weight on the scale; by pressing the arrow ⇓ ⇑ keys it is possible to see the corresponding converter points.

MiLLiV MILLIVOLT

Check of cell signal in three decimal millivolts.

diSPLAY DISPLAY

By pressing **OK/menu** the instrument turns on all the display segments one at a time, after which it exits automatically from the step.

kEyb. KEYBOARD

By pressing **OK/menu** the instrument displays 0; by pressing the keys one at a time, the relative codes are rebrought to the display. One exits pressing the same key three times.

CtS.St. CTS STATUS

By pressing **OK/menu** the CTS signal type of the connected printer is shown on the display.

PC.dEbuG DEBUG WITH PC (§)

Diagnostics check by the manufacturer.
(§) Present depending on the model.

bt.LEVEL BATTERY LEVEL

By pressing **OK/menu** the battery charge status is shown on the LED display, in case a battery is connected, (bt 0…9), or it is indicated that the instrument is powered by the mains (“PoWEr” blinking).

outPuts RELAY TEST

By pressing **OK/menu** it is possible to test all the available relays; by selecting these one at a time with the ▲ ▼ arrow keys, these are activated:
rELE.b.01, rELE.b.02, rELE.b.03, rELE.b.04 Relay of the I/O expansion board (optional)

inPuts INPUT TEST

By pressing **OK/menu** the instrument displays “I xyzw” in which x, y, z and w show the status of the 4, 3, 2, 1 inputs, respectively. These can take on the following values:

0 Input not active
1 Input active
E communication error with the I/O interface on the bootbus or interface not present.

To exit the input test press **OK/menu**.

3.1 SCALE CALIBRATION

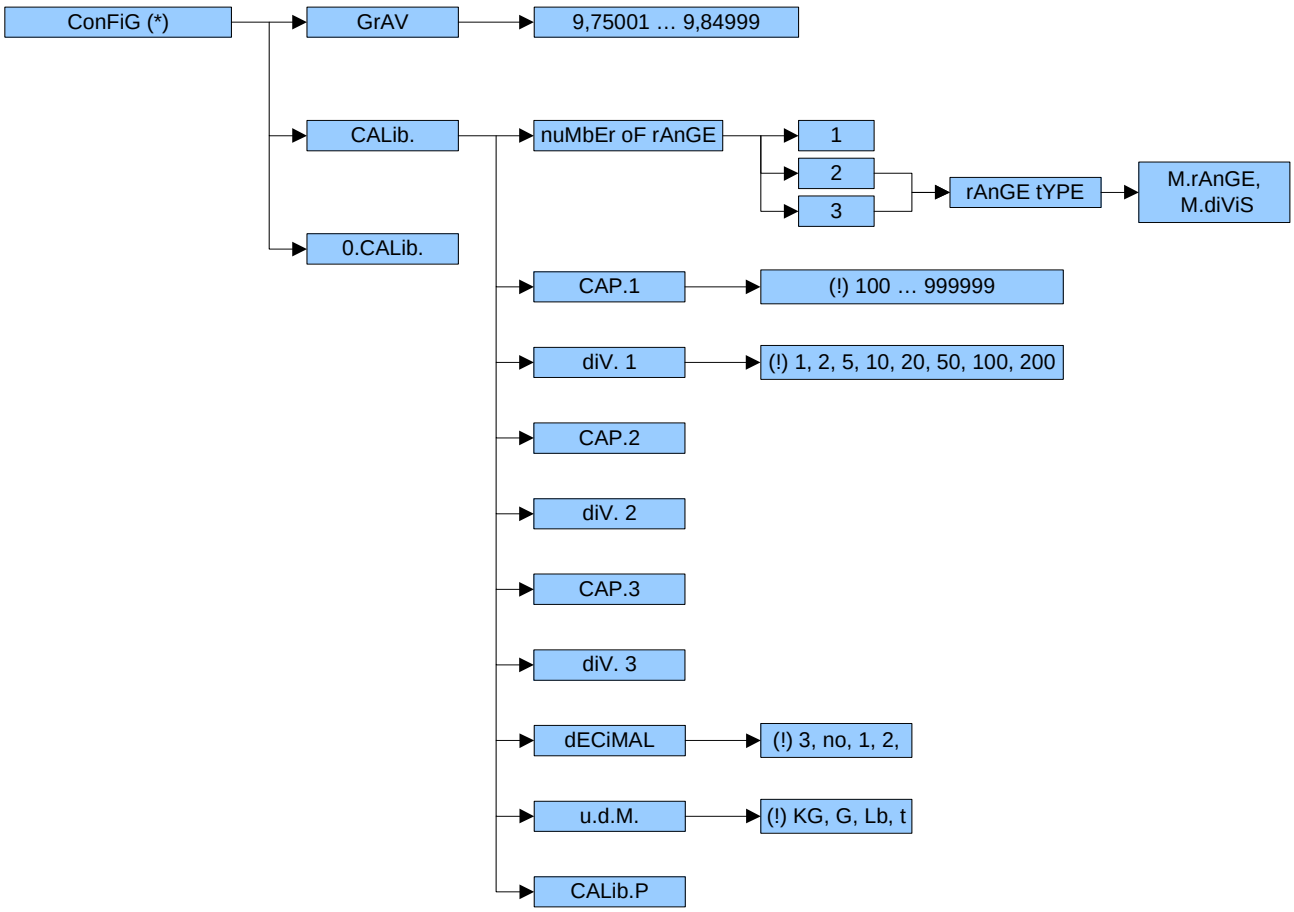

1) Enter in the SET-UP environment of the scale (when switched on, press for an instant the **TARE** key (TRD) or ZERO/TARE for an instant (TRB/TRI/TRIKOMP) while the version is displayed).
2) Select the **SEtuP** >> **ConFiG** >> **CALib.** step and press **OK/menu;**
   One is asked to enter the number of the scale ranges (the display shows in sequence the message SELECt nuMbEr rAnGE): if one has just one measuring range, select 1 and confirm with **OK/menu**.
   In case of various fields (up to 3), one is asked to enter the type of scale (the display shows in sequence the message SELECt rAnGE tyPE): select M.rAnGE (in case of multirange scale) or M.diViS (in case of multidivision scale) and confirm with **OK/menu**.
3) Select the **CAP.1** step and press **OK/menu;**
   Set the total capacity of the scale or the first range in case of n ranges and press **OK/menu** (minimum of 100 maximum 999999).
   (!) 100
4) Select the **diV. 1** step and press **OK/menu**;
   Set the minimum division of the scale or the first range in case of n ranges and press **OK/menu** (selectable values: 1, 2, 5, 10, 20, 50, 100, 200).
   (!) 1
5) Select step **CAP.2** (only in the case of n ranges) and press **OK/menu;**
   Set the capacity of the second range and press **OK/menu**.
6) Select step **diV. 2** (only in the case of n ranges) and press **OK/menu**;
   Set the minimum division of the second range and press **OK/menu**.
7) Select step **CAP.3** (only in the case of n ranges) and press **OK/menu;**
   Set the capacity of the third range and press **OK/menu**.
8) Select the step **diV. 3** (only in the case of n ranges) and press **OK/menu**;
   Set the minimum division of the third range and press **OK/menu**.
9) Select the step **dECiMAL** and press **OK/menu;**
   Set the decimals and press **OK/menu** (selectable values: 1, 2, 3, no decimal)
   (!) 3

10) Select the **u.d.M** step and press **OK/menu;**
    Set the unit of measure (g, lb, t, kg) and press **OK/menu**.
    (!) kg
11) Select the **CALib.P** step and press **OK/menu**.
12) Set the number of points on which one wants to calibrate (from 1 to 8, with 1 one will do the zero point and the weight point) and press **OK/menu**.
    N.B.: the calibration points must be increasing (point 1 < point 2 < point 3 etc..).
13) One is asked the zero scale point: unload the scale and wait a few seconds, then press **OK/menu**.
14) If the zero scale has been done well, one is asked for the first sample weight
15) Put the weight on the scale, on the indicator set the value of the weight put on the scale, and press **OK/menu**.
16) In case of various points restart from point 15).
17) Once the calibration is made of all the necessary points, press many times the **C** or **F** key until the indicator shows "SAVE? In the display: confirm with **OK/menu** to store and return to weighing.

IN CASE THE ZONE OF USE IS DIFFERENT FROM THE CALIBRATION ZONE ONE SHOULD:

1) Enter in the SET-UP environment of the scale (when turned on, press for an instant the **TARE** key (TRD) or ZERO/TARE for an instant (TRB/TRI/TRIKOMP) while the version is displayed).
2) Enter in the **SEtuP** >> **ConFiG** >> **GrAV** step and set the gravitational acceleration value of the calibration zone.
3) Enter again the SET-UP environment and carry out the calibration as described previously**.**
4) Save and exit from the SET-UP environment (press mant times the **C** or **F** key until the indicator shows "SAVE? in the display and confirm with **OK/menu**.
5) Enter in the **GrAV** step and set the gravitational acceleration value of the ZONE OF USE.
6) Save and exit the SET-UP environment.
7) The weight error caused by the error of a different gravitational attraction value between the calibration zone and the zone of use is corrected automatically.

QUICK CALIBRATION OF ZERO

It is useful to calibrate just the point of ZERO when a permanent tare weight is put onto the platform (for example a roller unit).

1) Enter the SET-UP environment of the scale (when turned on, press for an instant the **TARE** key (TRD) or ZERO/TARE for an instant (TRB/TRI/TRIKOMP) while the version is displayed).
2) Enter in the **SEtuP** >> **ConFiG** >> **0.CALib.** step and press **OK/menu**.
3) Put the tare on the scale and press **OK/menu;** the indicator displays **PrESS.ok**.
4) Press **OK/menu** to confirm the operation.
5) Once the calibration of zero, press many times the **C** or **F** key until the indicator shows "SAVE? In the display: confirm with **OK/menu** to store and return to weighing.

4. DISPLAY OF THE GEOGRAPHICAL UTILISATION AND CORRECTION ZONE OF THE WEIGHING ERROR DUE TO THE DIFFERENT GRAVITATIONAL ATTRACTION BETWEEN THE CALIBRATION AND UTILISATION ZONE

4.1 INDICATION AND/OR DISPLAY OF THE GEOGRAPHICAL UTILISATION ZONE (Compulsory for the legal type instruments)

This instrument conforms to the laws currently in force regarding non-automatic weighing instruments. Such g-sensitive instruments are influenced by the gravitational acceleration value "**g**" of the utilisation zone hence it is compulsory to indicate, with a label or on the display, the coded name of the utilisation zone where the weighing machine can be used.

4.2 CORRECTION OF THE WEIGHING ERROR INTRODUCED BY A DIFFERENT GRAVITATIONAL ATTRACTION VALUE BETWEEN THE CALIBRATION AND UTILISATION ZONE (compulsory for legal type instruments)

This instrument conforms to the laws currently in force regarding non-automatic weighing instruments. Such g-sensitive instruments are influenced by the gravitational acceleration value "**g**" of the utilisation zone so a special programme has been created to compensate for any differences in the gravitational attraction between the place where the weighing machine is calibrated and the place of utilisation.
During configuration the "**g**" values relative to the utilisation zone and to the zone of calibration are entered at a certain programming step which eliminates the weight error introduced by the different gravitational attraction value.

5. SERIAL OUTPUTS

The instrument has two serial outputs, one which is configurable in RS232/RS485 for connection to the PC/PLC, the other is configurable in RS232/TTL for connection to the printer.

5.1 PC SERIAL PORT (CoM PC)

The PC serial port has the output in ASCII code compatible with the majority of the remote displays, PCs and other devices. The transmission speed may be selected in the SET UP among these: 1200, 2400, 4800, 9600, 19200, 38400, 57600, 115200 Baud.
It is bi-directional (full-duplex) and uses a RS232 or a RS485 for the data transmission depending on the setting of the relative jumpers on the serial board (see section 7- "MOTHERBOARD AND SERIAL OUTPUTS CONNECTION DIAGRAM").
It is mainly used for connections with a computer, PLC, and additional remote displays.

Following are shown the connections between the PC and the indicator standard RS232:

	PC 9pin (male)	PC 25pin (male)	TR CTEL serial line	STANDARD CABLE FOR CONNECTION TO PC 9-pole female connector
RX	2	3	6 TX	2 Orange
TX	3	2	3 RX	3 Blue/White
GND	5	7	5 GND	5 Green/White

Please find below the RS485 standard connection of the indicator:

	TR C.TEL serial line	STANDARD CABLE 9-pole female connector	
UX+	6	2	Orange
UX-	3	3	Blue/White
GND	5	5	Green/White

The transmission of data through the PC serial port can be configured in **4** different ways, according to the setting of the **PC.ModE** step in the TECHNICAL SET-UP: on request, continuous, on stability or in RS485 mode.
Refer to the "5.3 DATA TRANSMISSION MODES OF THE PC SERIAL PORT" section for the functioning specifics.

5.2 PRINTER SERIAL PORT (CoMPrn)

It is bi-directional (full-duplex) and uses for the data transmission a RS232 or a TTL, depending on the setting of the relative jumpers on the serial board (see section 7- "MOTHERBOARD AND SERIAL OUTPUTS CONNECTION DIAGRAM"); it is mainly used for connections with a computer, PLC.
Below is shown the connection between various types of PRINTERS and the indicator:

TMU295/LX300 25pin (female)	LP522/LP542 DP24 9pin (female)	DP190 terminal board	Indicator Serial line	STANDARD CABLE
7	5	GND	3 GND	Grey
20	8	BU	2 CTS	Brown
3	3	RX	1 TX	Pink

TPR	INDICATORE	STANDARD
Terminal board	Serial line	CABLE
GND	15 GND	Blacke
RTS	16 RXD	Yellow
RX	17 TXD	Grey
		Blue (not connected)
Printer power supply		
+ VP	Red	
GND	Black	

The connection with the serial outputs takes place through a terminal board set on the main board of the TRI (see MOTHER BOARD CONNECTION SCHEME). It is therefore necessary, to open the instrument through the front panel and put the connection cable through the RS232 output (see CASE AND DIMENSIONS TRI drawing 1 and 2, in the user manual).
THE CONNECTION AND THE SOFTWARE CONFIGURATION OF THE SERIAL OUTPUTS MUST BE CARRIED OUT BY TECHNICAL PERSONNEL WHO KNOW THE PROCEDURES ON THE BASIS OF THE NEEDS OF THE USER.
The data transmission cable must be kept away from the AC power supply lines.
!! CUT POWER OFF BEFORE OPENING THE INSTRUMENT !!

5.3 DATA TRANSMISSION MODES OF THE PC SERIAL PORT

TRANSMISSION UPON EXTERNAL COMMAND **(rEquESt)**
Requires an external command from PC in order to send the data requested (see “SERIAL COMMANDS FORMAT” section). The transmission takes place anytime it’s requested.

CONTINUOUS TRANSMISSION **(Contin)**
This mode is used for interfacing to the PC, remote displays and other devices which request a constant updating of the data independently from the weight stability.

TRANSMISSION UPON EACH WEIGH **(At Stab)**
The transmission takes place automatically, each time the weight on the platform reaches stability ("~" led is off); the minimum transmission limit is of 10 divisions with a NON APPROVED instrument and 20 divisions with an APPROVED instrument. The reactivation of the transmission takes place depending on how the “**rEACt**” parameter of the USER SETUP (see user manual) or in the TECHNICAL SETUP, in other words, weight movement or passage by zero of the NET weight.

TRANSMISSION IN RS 485 SERIAL MODE **(485Mode)**
Upon request, it is possible to install a RS485 Half Duplex serial output giving the bi-directional communication possibility for up to 32 indicators with one computer.
The transmission protocol is the same as the transmission upon request, with the adding of a code which identifies the weight indicator (i.e. “00READ <CR LF>”).

5.4 SERIAL COMMANDS FORMAT

Version reading command VER<CR LF>
Instrument response : VER,vvv,XXX<CR LF>
In which: XXX can be TRI or TRD
vvv is the firmware version

Weight read command [CC]READ<CR LF>
Instrument response: see Transmission Protocol

Reading command of extended weight string: [CC]REXT<CR LF>
Instrument's answer: [CC]B,hh,NNNNNNNN,YYTTTTTTTT,PPPPPPPP,uu<CR LF>
in which:

[CC] =	INSTRUMENT CODE IN THE FORMAT OF TWO ASCII DECIMAL DIGITS ONLY WHEN THE 485 PROTOCOL IS SELECTED (FOR EXAMPLE 00)	
B =	scale number (zero for the remote scale)	
hh =	UL	Underload
	OL	Overload
	ST	Stability of the display
	US	Instability of the display
NNNNNNNN =	net weight on 8 characters including sign and decimal point	
YY =	"PT" if the tare weight is entered with the keyboard, otherwise YY = " " (two space characters) if the tare weight is weighed	
TTTTTTTT =	tare weight on 8 characters including sign and decimal point	
PPPPPPPP =	number of pieces on 8 characters, pieces equal to 0 if the indicator is not in a counting functioning mode	
uu =	Unit of measure "Kg" "**b**g" "**b**t" "lb	
CR =	Carriage Return (ascii character decimal code 13)	
LF =	Line Feed (ascii character decimal code 10)	

Weight reading command with sensitivity times 10
[CC]GR10<CR LF>
Instrument response: STANDARD STRING (see "5.5 TRANSMISSION PROTOCOLS" section).

Reading command of microvolts relative to the weight
[CC]MVOL<CR LF>
Instrument response: STANDARD STRING (see "5.5 TRANSMISSION PROTOCOLS" section).

Reading command of converter points relative to the weight
[CC]RAZF<CR LF>
Instrument response: STANDARD STRING (see "5.5 TRANSMISSION PROTOCOLS" section).

Tare command: [CC]TARE<CR LF> or: [CC]T<CR LF>
Instrument response: [CC]OK<CR LF> if the command has been RECEIVED.

Zero command: [CC]ZERO<CR LF> or: [CC]Z<CR LF>
Instrument response: [CC]OK<CR LF> if the command has been RECEIVED.

Clear command: [CC]CLEAR<CR LF> or: [CC]C<CR LF>
Instrument response: [CC]OK<CR LF> if the command has been RECEIVED.

Net/Gross change command: [CC]NTGS<CR LF> or: [CC]N<CR LF>
Instrument response: [CC]OK<CR LF> if the command has been RECEIVED.

Print command: [CC]PRNT<CR LF> or: [CC]P<CR LF>
Instrument response: [CC]OK<CR LF> if the command has been RECEIVED.

Fixed tare command: [CC]WTTTTTT<CR LF>
in which: W= command
TTTTTT = tare in ASCII, max 6 characters.
Example: W10.0 <CR LF>
Instrument response: none

APW transmission command: [CC]XPPPPPPPP<CR LF>
in which: X= command
PPPPPPPP = APW in ASCII, max 8 characters.
Example: X10.0<CR LF>
If the scale is configured in the counting mode
one can transmit the value of the average piece weight
(expressed in the scale's unit of measure)
with which one carries out the count.
Instrument's answer: [CC]OK<CR LF> if the command has been RECEIVED.

Turn off command of the instrument
[CC]CMDOFF <CR LF>
Answer: [CC]OK<CR LF>
Example: 01CMDOFF <CR LF>
Output: 01OK<CR LF>

Reset command of the instrument [CC]CMDRESET <CR LF>
Answer: CC]OK<CR LF>
Example: 01CMDRESET <CR LF>
Output: 01OK<CR LF>

SETUP saving command of the instrument
[CC]CMDSAVE <CR LF>
Answer: [CC]OK<CR LF>
Example: 01CMDSAVE <CR LF>
Output: 01OK<CR LF>

SETUP entering command of the instrument
[CC]CMDSETUP <CR LF>
Answer: [CC]OK<CR LF>
Example: 01CMDSETUP <CR LF>
Output: 01OK<CR LF>

NOTA: The instrument does not transmit the OK answer to the following short commands: C, N, P, R, T, W, X, Z.

5.4.1 SERIAL ERRORS

LEGEND	
[CC] o <II>	instrument code, e.g. 00 (only with RS485 protocol)
<CR LF>	Carriage Return + Line Feed (ASCII characters 13 and 10)
<ESC>	ASCII character ASCII 27
<STX>	ASCII character ASCII 02
B	space character, ASCII 32.

SERIAL ERRORS Upon each serial command received the instrument transmits a string containing the answer (see the command description) or it transmits one of the following indications:	
OK<CR LF>	it is shown when a correct command is transmitted from the PC to the indicator. The OK answer does not imply that the instrument executes the zero.
ERR01<CR LF>	it is shown when a correct command is transmitted from the PC to the indicator however it is followed by letters inserted involuntarily (I.E.: READF, TARES…).
ERR02<CR LF>	it is shown when a correct command is transmitted from the PC to the indicator, but containing wrong data.
ERR03<CR LF>	it is shown when a non allowed command is transmitted. It may be a command not used in the selected functioning mode or the command reaches the indicator in the instant in which the keyboard buffer is already occupied by another command
ERR04<CR LF>	it is shown when an inexistent command is transmitted.
NOTE: The instrument doesn't transmit any indication with the short commands, like the ones made up of only one letter and then the possible parameter.	

5.5 TRANSMISSION PROTOCOLS

It is possible to select two communication protocols (see TECHNICAL SET-UP, **ProtoC** parameter in the **SEriAL** menu.

StAndAr

The weight data transmission on the serial port happens in the following format:
[CC]HH,KK,PPPPPPPP,UM<CR LF>

in which [CC] = instrument code, e.g. 00 (only with 485 protocol)

HH = UL Underload
OL Overload
ST Stability of the display
US Unstability of the display

KK = NT Net Weight
GS Gross Weight
PZ Pieces

PPPPPPPP = Weight (8 digits including the possible sign and decimal point).

UM = Unit of measure (Kg, g, t, lb)

<CR LF> Carriage Return + Line Feed
ASCII Characters 13 and 10

AFXX

The weight data transmission on the serial port is done in the following format:
[CC]SS,B,LLLLLLLLLUM,YYTTTTTTUM<CR LF>

in which: [CC] = instrument code, es.00 (only with RS485 protocol)

SS UL Underload
OL Overload
ST Weight stability
US Weight instability

, Comma character

B Scale Number

, Comma character

LLLLLLLLL Gross weight (10 digits including the possible sign and decimal point).

UM Unit of measure (Kg, g, t, lb)

, Comma character

YY 2 spaces if the tare is automatic
PT if a tare is pre-set or set manually
TTTTTTTTT Tare weight (10 digits including the possible sign and decimal point).

UM = Unit of measure (Kg, g, t, lb)

<CR LF> Carriage Return + Line Feed
ASCII Characters 13 and 10

6. PROGRAMMING THE PRINTOUTS

It is possible to programme 6 different print tickets, which are in the **SEtuP** >> **SEriAL** >> **Prn.FMt** parameter inside the TECHNICAL SETUP:

	DINITOOLS Vector Number
1 - C.F. 01 Ticket of the PRINT key.	**1**
2 - C.F. 02 Ticket of TOTALIZATION.	**2**
3 - C.F. 03 Ticket of the PARTIAL TOTAL.	**3**
4 - C.F. 04 Ticket of the GENERAL TOTAL.	**4**
5 - C.F. 05 Ticket of the GRAND TOTAL.	**5**
6 - C.F. 06 Ticket of the FIRST TOTALISATION HEADING.	**6**

It is possible to configure the formats:

- **through the "DINITOOLS.net**" **software** for PC, and transmitted to the indicator through the serial line; it is necessary that the print format number ("Print Format Number") is a value between 1 and 6 to indicate the format to be overwritten, and that the indicator is in the technical or user setup. Once the formats are configured one should exit and save the setup.
- **manually from the indicator** by entering in the **SEtuP** >> **SEriAL** >> **Prn.FMt** step inside the SET-UP environment.

MANUAL CONFIGURATION OF THE PRINT FORMATS

Each ticket is made up of a maximum of 26 memory storages (which we will call "lines", from 0 to 25), which, when programmed, these will produce the desired printout; in each line one can enter (through a 3-digit code) a command named "print block", which will produce a certain type of printout, for example:
PRINT NET WEIGHT (code 301), which will print the net weight value, the unit of measure and the CR or CR LF to go to the next line.
Or it is possible to print a single alphanumeric character, entering the relative ASCII code in the line (from 0 to 255).
Once entered in a ticket (for example **C.F. 01** – PRINT key), the display shows:

X –YYY in which:
X is the line number which is being programmed.
YYY is the entered code (from 0 to 255 prints the ASCII code, from 300 onwards, it prints the realitve block).

In the case in which the ticket is empty, each line will be filled in with a print end (the display shows "0 - End"); if instead the ticket has already been filled in (or the print default has already enabled) one will find the last saved programming.

HEADING TICKET (**C.F. 06**)
The heading ticket works in a conditional way, in other words ONLY UPON THE FIRST TOTALIZATION will be printed, (in other words AFTER THE ZEROING OF THE PARTIAL TOTAL, in the totalizer mode, or AFTER THE ZEROING OF THE TOTAL, in the other functioning modes).

KEYS' FUNCTIONS

⇑ ⇓ scrolls forward / backward inside the lines of the print ticket.
While entering a code in the TRD, it increases / decreases the selected digit.

F enters a print block or an ASCII character in the selected line moving the consecutive blocks of one place; if a block is moved beyond the 25th place, it is deleted; while entering a code, it allows to exit without confirming the entered code.

OK/MENU modifies the code in the current line; while entering it confirms the entered code.

ZERO cancels the current line compacting the blocks which follow (TRD) or ZERO/TARE for a few seconds (TRB/TRI/TRIKOMP). While entering a code in the TRD, it moves to the left selecting the digit to be modified.

TARE enters a print end in the current line (TRD) or ZERO/TARE for an instant (TRB/TRI/TRIKOMP). While entering a code in the TRD, it moves to the right selecting the digit to be modified.

C exits the programming; if a ticket has been modified, one is asked to save (the display shows "SAVE?"): with OK/MENU one confirms, with another key one exits without saving. While entering a code, it quickly zeros the present value.

NUMERICAL KEYBOARD allows entering a code inside of the selected printing line.

NOTES

- For the complete list of the ASCII codes and the print blocks, see the sections "6.2 ASCII CODE TABLE" and "6.3 LIST OF PRINT BLOCKS".
- To terminate the programming of a ticket, it is necessary that the last command be "Print end": one should enter the code 300, or press the TARE key (TRD) or ZERO/TARE for an instant (TRB/TRI/TRIKOMP), in the last line of the ticket.

PRINTING ON THE PC SERIAL PORT

By programming correctly a ticket, it is possible to direct the printing on the PC serial port, and then bring it back onto the printer port; the blocks to be used are:
320 (PRINTING ON PC PORT), 321 (PRINTING ON SERIAL PORT), 322 (FORCES THE PRINTING).
The correct syntax in the ticket is the following:

- **320 PRINTS ON PC PORT**
- - prints block or ASCII character
- …
- **322 FORCES PRINTING**
- **321 PRINTS ON PRINTER PORT**
- prints block or ASCII character
- …
- **322 FORCES PRINTING**
- 300 PRINT END

The "Forces print" block executes the transmission of all the blocks or ASCII characters entered BEFORE the same block; reading block 320, the printout is directed onto the PC port.

All the blocks or ASCII characters entered here are instead transmitted through the printer serial port.

6.1 PROGRAMMING EXAMPLE

Programming the ticket of the PRINT key (empty) in this way:

MARIO ROSSI SRL
Date – time
Gross weight
Tare weight
Net weight
3 CRLF
Print end

After having entered the SETUP environment, follow these instructions:

- Go into step "**C.F. 01",** inside the "SERIAL" parameter of the "SETUP" step and press OK/MENU: the display shows "**0 – End"** (first line, print end).
- Press OK/menu, the display shows **"b 000"**: enter the code 077 (the ASCII corrsponding to the letter "M"), confirm with OK/menu.
- The display now shows "**1 – End"** (second line, print end), press OK/menu and enter the code 065 (the ASCII corrsponding to the letter "A"); confirm with OK/menu to go to the third line.
- repeat the same operations entering the following codes:

082 (lettera "R")
073 (lettera "I")
079 (lettera "O")
032 (spazio)
082 (lettera "R")
079 (lettera "O")
083 (lettera "S")
083 (lettera "S")
073 (lettera "I")
308 (prints terminator)
409 (prints date - time)
302 (prints gross weight)
301 (prints net weight)
303 (prints tare weight)
300 (print end)

**** It is possible to enter the print end also with the TARE key (mod.TRD) or ZERO/TARE for an instant (TRB/TRI/TRIKOMP) ****

- Press the C key to exit the programming: the display shows "SAVE?", confirm with OK/menu (one goes back into the "SERIAL" parameter).
- Exit the SETUP environment of the instrument by pressing the C key three times: the display shows "SAVE?", confirm the changes made with OK/menu (the instrument returns to weighing).

6.2 ASCII CODE TABLE

Dec	Hex	Char	Dec	Hex	Char	Dec	Hex	Char	Dec	Hex	Char
0	00	Null	32	20	Space	64	40	@	96	60	`
1	01	Start of heading	33	21	!	65	41	A	97	61	a
2	02	Start of text	34	22	"	66	42	B	98	62	b
3	03	End of text	35	23	#	67	43	C	99	63	c
4	04	End of transmit	36	24	$	68	44	D	100	64	d
5	05	Enquiry	37	25	%	69	45	E	101	65	e
6	06	Acknowledge	38	26	&	70	46	F	102	66	f
7	07	Audible bell	39	27	'	71	47	G	103	67	g
8	08	Backspace	40	28	(	72	48	H	104	68	h
9	09	Horizontal tab	41	29	)	73	49	I	105	69	i
10	0A	Line feed	42	2A	*	74	4A	J	106	6A	j
11	0B	Vertical tab	43	2B	+	75	4B	K	107	6B	k
12	0C	Form feed	44	2C	,	76	4C	L	108	6C	l
13	0D	Carriage return	45	2D	-	77	4D	M	109	6D	m
14	0E	Shift out	46	2E	.	78	4E	N	110	6E	n
15	0F	Shift in	47	2F	/	79	4F	O	111	6F	o
16	10	Data link escape	48	30	0	80	50	P	112	70	p
17	11	Device control 1	49	31	1	81	51	Q	113	71	q
18	12	Device control 2	50	32	2	82	52	R	114	72	r
19	13	Device control 3	51	33	3	83	53	S	115	73	s
20	14	Device control 4	52	34	4	84	54	T	116	74	t
21	15	Neg. acknowledge	53	35	5	85	55	U	117	75	u
22	16	Synchronous idle	54	36	6	86	56	V	118	76	v
23	17	End trans. block	55	37	7	87	57	W	119	77	w
24	18	Cancel	56	38	8	88	58	X	120	78	x
25	19	End of medium	57	39	9	89	59	Y	121	79	y
26	1A	Substitution	58	3A	:	90	5A	Z	122	7A	z
27	1B	Escape	59	3B	;	91	5B	[	123	7B	{
28	1C	File separator	60	3C	<	92	5C	\	124	7C	|
29	1D	Group separator	61	3D	=	93	5D	]	125	7D	}
30	1E	Record separator	62	3E	>	94	5E	^	126	7E	~
31	1F	Unit separator	63	3F	?	95	5F	_	127	7F	□

Dec	Hex	Char	Dec	Hex	Char	Dec	Hex	Char	Dec	Hex	Char
128	80	Ç	160	A0	á	192	C0	└	224	E0	α
129	81	ü	161	A1	í	193	C1	┴	225	E1	ß
130	82	é	162	A2	ó	194	C2	┬	226	E2	Γ
131	83	â	163	A3	ú	195	C3	├	227	E3	π
132	84	ä	164	A4	ñ	196	C4	─	228	E4	∑
133	85	à	165	A5	Ñ	197	C5	┼	229	E5	σ
134	86	å	166	A6	ª	198	C6	╞	230	E6	µ
135	87	ç	167	A7	º	199	C7	╟	231	E7	τ
136	88	ê	168	A8	¿	200	C8	╚	232	E8	Φ
137	89	ë	169	A9	⌐	201	C9	╔	233	E9	Θ
138	8A	è	170	AA	¬	202	CA	╩	234	EA	Ω
139	8B	ï	171	AB	½	203	CB	╦	235	EB	δ
140	8C	î	172	AC	¼	204	CC	╠	236	EC	∞
141	8D	ì	173	AD	¡	205	CD	═	237	ED	ø
142	8E	Ä	174	AE	«	206	CE	╬	238	EE	ε
143	8F	Å	175	AF	»	207	CF	╧	239	EF	∩
144	90	É	176	B0	░	208	D0	╨	240	F0	≡
145	91	æ	177	B1	▒	209	D1	╤	241	F1	±
146	92	Æ	178	B2	▓	210	D2	╥	242	F2	≥
147	93	ô	179	B3	│	211	D3	╙	243	F3	≤
148	94	ö	180	B4	┤	212	D4	╘	244	F4	⌠
149	95	ò	181	B5	╡	213	D5	╒	245	F5	⌡
150	96	û	182	B6	╢	214	D6	╓	246	F6	÷
151	97	ù	183	B7	╖	215	D7	╫	247	F7	≈
152	98	ÿ	184	B8	╕	216	D8	╪	248	F8	°
153	99	Ö	185	B9	╣	217	D9	┘	249	F9	∙
154	9A	Ü	186	BA	║	218	DA	┌	250	FA	·
155	9B	¢	187	BB	╗	219	DB	█	251	FB	√
156	9C	£	188	BC	╝	220	DC	▄	252	FC	ⁿ
157	9D	¥	189	BD	╜	221	DD	▌	253	FD	²
158	9E	₧	190	BE	╛	222	DE	▐	254	FE	■
159	9F	ƒ	191	BF	┐	223	DF	▀	255	FF	

6.3 LIST OF PRINT BLOCKS

CODE		PRINT FORMAT
**** GENERIC BLOCKS ****		
300		PRINT END
301	NET WEIGHT	NET**bb**=XXXXXXXXXUM + T
in which XXXXXXXXX is the weight value on 10 digits including the comma; the field expands from right to left.		
302	GROSS WEIGHT	GROSS=XXXXXXXXXUM + T
303	TARE WEIGHT	TARE**b**=XXXXXXXXXUM + T
304	JUST NET WEIGHT	XXXXXXXXX
305	JUST GROSS WEIGHT	XXXXXXXXX
306	JUST TARE WEIGHT	XXXXXXXXX
307	FOLLOWING MACRO TERMINATOR SKIPS	
308	PRINTS TERMINATOR	CR or CRLF or NO TERMINATOR
317	DOTTED LINE	-- -- -- -- -- -- -- -- -- -- -- -- -- -- -- + T
318	PRINTS 3 CRLF	
319	DATE / TIME FOR DP24/DP190	**b**HH:MM**b**GG-MM-AA + T
the date and time of the printer is printed; one can adjust it through the printer.		
320	PRINTS ON PC PORT	
321	PRINTS ON PRINTER PORT	
322	FORCES PRINTOUT	
392	PRINTS 3 LF	
393	JUST TEXT “NET =”	NET**bb**=
394	JUST TEXT “GROSS=”	GROSS=
395	JUST TEXT “TARE =” or “PT =”	TARE**b**= o PT**b**=
396	JUST TEXT “TARE =”	TARE**b**=
397	JUST TEXT “TOTAL”	TOTAL**b**
398	JUST TEXT “PCS =”	PCS**bb**=
407	DATE	GG-MM-AA + T
408	TIME	HH:MM + T
409	DATE TIME	HH:MM**b**GG-MM-AA + T
410	JUST DATE	GG-MM-AA
411	JUST TIME	HH:MM
It is necessary to have the time/date option.		
426	SCALE UNIT OF MEASURE	UM + T
**** GENERIC TOTALS (not handled in the TOTALIZER mode) ****		
309	NET TOTAL	T.NET**bb**=XXXXXXXX**b**UM + T
in which XXXXXXXX is the weight value on 8 digits including the comma; the field expands from right to left.		
310	GROSS TOTAL	T.GROSS=XXXXXXXX**b**UM + T
311	TARE TOTAL	T.TARE**b**=XXXXXXXX**b**UM + T
312	WEIGHS TOTAL	WEIGHS=XXXXXX + T
313	JUST NET TOTAL	XXXXXXXX
314	JUST GROSS TOTAL	XXXXXXXX
315	JUST TARE TOTAL	XXXXXXXX
316	JUST TOTAL WEIGHS	XXXXXX

**** COUNTING MODE ****

323 NUMBER OF PIECES PCS**bb**=XXXXXXXXX**b**N + T
in which XXXXXXXXX is the number of pieces on 10 digits, the field expands from right to left.

324 AVERAGE PIECE WEIGHT APW**b**=XXXXXXXXX**b**UM + T
in which XXXXXXXXX is the average piece weight value on 10 digits including the comma, with four decimals; the field expands from right to left.

325 TOTAL OF PIECES T.PCS=XXXXXXXXX**b**N + T

326 JUST TOTAL OF PIECES XXXXXXXXX

327 JUST AVERAGE PIECE WEIGHT XXXXXXXXX

328 JUST NUMBER OF PIECES XXXXXXXXX

**** TOTALIZER MODE ****

329 NET PARTIAL TOTAL N.YYY**b**T1.N.XXXXXXX**b**UM + T
in which YYY shows the number of weighs, XXXXXXX the weight value in 8 digits including the comma; the weight field expands from right to left.

330 NET GENERAL TOTAL N.YYY**b**T2.N.XXXXXXX**b**UM + T

331 NET GRAND TOTAL N.YYY**b**T3.N.XXXXXXX**b**UM + T

332 GROSS PARTIAL TOTAL N.YYY**b**T1.G.XXXXXXX**b**UM + T

333 GROSS GENERAL TOTAL N.YYY**b**T2.G.XXXXXXX**b**UM + T

334 GROSS GRAND TOTAL N.YYY**b**T3.G.XXXXXXX**b**UM + T

335 T1 ADDITIONAL VALUE T1**b**ADD.**b**XXXXXXXXX + T
in which XXXXXXXXX is the additional value, linked to the partial total in 8 digits; the field expands from left to right. It is reset upon the resetting of the partial total.

336 T2 ADDITIONAL VALUE T2**b**ADD.**b**XXXXXXXXX + T
in which XXXXXXXXX is the additional totalised value, linked to the general total in 8 digits; the field expands from left to right. It is reset upon the resetting of the general total.

337 T3 ADDITIONAL VALUE T3**b**ADD.**b**XXXXXXXXX + T
in which XXXXXXXXX is the additional totalised value, linked to the grand total in 10 digits; the field expands from left to right. It is reset upon the resetting of the grand total.

338 TOTALIZED NET N.YYY**b**NET**bbb**XXXXXX**b**UM + T
in which YYY indicates the number of partial weighs, XXXXXX is the partial net weight value on 7 digits including the comma (the field expands from right to left).

339 TOTALIZED GROSS N.YYY**b**GROSS**b**XXXXXX**b**UM + T

340 TOTALIZED TARE N.YYY**b**TARE**bb**XXXXXX**b**UM + T

341 JUST NET PARTIAL TOTAL XXXXXXXX

342 JUST GROSS PARTIAL TOTAL XXXXXXXX

343 JUST TARE PARTIAL TOTAL XXXXXXXX

344 JUST PARTIAL TOTAL WEIGHTS XXXXX

345 JUST GENERAL TOTAL WEIGHS XXXXX

346 JUST GRAND TOTAL WEIGHS XXXXX

347 JUST TOTALIZED NET XXXXXX

348 JUST TOTALIZED GROSS XXXXXX

349 JUST TOTALIZED TARE XXXXXX

350 JUST NET GENERAL TOTAL XXXXXXX

351 JUST GROSS GENERAL TOTAL XXXXXXX

352 JUST TARE GENERAL TOTAL XXXXXXX

353 JUST NET GRAND TOTAL XXXXXXX

354 JUST GROSS GRAND TOTAL XXXXXXX

355 JUST TARE GRAND TOTAL XXXXXXX

386 PARTIAL TOTAL WEIGHS WEIGHS=XXXXX + T

387 GENERAL TOTAL WEIGHS WEIGHS=XXXXX + T

388 GRAND TOTAL WEIGHS WEIGHS=XXXXX + T

389 TARE PARTIAL TOTAL N.YYY**b**T1.T.XXXXXXX**b**UM + T

390 TARE GENERAL TOTAL N.YYY**b**T2.T.XXXXXXX**b**UM + T

391 TARE GRAND TOTAL N.YYY**b**T3.T.XXXXXXX**b**UM + T

**** CHECK MODE ****

356 CHECK TOTAL -**b**T.Weight**b**-
YYYYY**b**XXXXXXXXXXUM + T

in which YYYYY indicates the number of weighs (which expands from left to right), XXXXXXXXX the weight value in 10 digits including the comma (which expands from right to left).

357 WEIGHS TOTAL -**B**V.HIGH**bbb**-
(Weight > Target + T2) **bbbbbbbbbbbbbbbbbbbbbbb**
YYYYY**b**XXXXXXXXXXUM + T

358 WEIGHS TOTAL -**b**HIGH**bbbbb**-
(Target + T1 < Weight =< Target + T2) **bbbbbbbbbbbbbbbbbbbbbbb**
YYYYY**b**XXXXXXXXXXUM + T

359 WEIGHS TOTAL OK -**b**OK**bbbbbbb**-
(Target - T1 =< Weight =< Target + T1) **bbbbbbbbbbbbbbbbbbbbbbb**
YYYYY**b**XXXXXXXXXXUM + T

360 WEIGHS TOTAL -**b**LOW**bbbbbb**-
(Target - T2 =< Weight < Target - T1) **bbbbbbbbbbbbbbbbbbbbbbb**
YYYYY**b**XXXXXXXXXXUM + T

361 WEIGHS TOTAL -**b**V.LOW**bbbb**-
(Weight < Target - T2) **bbbbbbbbbbbbbbbbbbbbbbb**
YYYYY**b**XXXXXXXXXXUM + T

362 STATISTICS AVERAGE=XXXXXXXXXXUM
ST.DEV.=YYYYYYYYYYUM + CRLF

in which XXXXXXXXXX is the average totalized weight in 10 digits including the comma, YYYYYYYYYY is the standard deviation value in 10 digits including the comma; the fields expand from right to left

363 JUST NUMBER OF WEIGHS **bbbbb**YYYYY
(Weight > Target + T2)

364 JUST NUMBER OF WEIGHS **bbbbb**YYYYY
(Target + T1 < Weight =< Target + T2)

365 JUST NUMBER OF OK WEIGHS **bbbbb**YYYYY
(Target - T1 =< Weight =< Target + T1)

366 JUST NUMBER OF WEIGHS **bbbbb**YYYYY
(Target - T2 =< Weight < Target - T1)

367 JUST NUMBER OF WEIGHS **bbbbb**YYYYY
(Weight < Target - T2)

368 JUST WEIGHS VALUE XXXXXXXXXX
(Weight > Target + T2)

369 JUST WEIGHS VALUE XXXXXXXXXX
(Target + T1 < Weight =< Target + T2)

370 JUST OK WEIGHS VALUE XXXXXXXXXX
(Target - T1 =< Weight =< Target + T1)

371 JUST WEIGHS VALUE XXXXXXXXXX
(Target - T2 =< Weight < Target - T1)

372 JUST WEIGHS VALUE XXXXXXXXXX
(Weight < Target - T2)

373 JUST WEIGHS AVERAGE XXXXXXXXXX

374 JUST STANDARD DEVIATION XXXXXXXXXX

**** PERCENTAGE MODE ****

375 TARGET WEIGHT TARGET**bb**=XXXXXXXXUM + T

in which XXXXXXXX is the reference weight in 8 digits including the comma; the field expands from right to left.

376 PERCENTAGE PERCENT**b**=XXXXXXXX**b**% + T

in which XXXXXXXXXX is the percentage shown on the display at the time of the printing, on 10 digits including the comma; the field expands from right to left

377 PERCENTAGE TOTAL TOTAL**bb**%=**b**XXXXXXXX**b**% + T

378 JUST TARGET WEIGHT XXXXXXXX

379 JUST PERCENTAGE XXXXXXXX

380 JUST PERCENTAGE TOTAL XXXXXXXX**b**%

**** ALIBI MEMORY ****

381* LAST GROSS WEIGHT ON ALIBI MEMORY XXXXXXXXXX

in which XXXXXXXXXX indicates the weight value in 10 digits including the comma; the weight field expands from right to left.

382* LAST TARE ON ALIBI MEMORY XXXXXXXXXX

383* JUST ACTIVE SCALE NUMBER WITH ALIBI MEMORY XX

384* JUST WEIGH ID XXXXXX

in which XXXXXX indicates the weight ID on 6 digits; the field expands from right to left.

385* JUST ALIBI MEMORY WEIGH UNIT OF MEASURE UM+T

**** BLOCKS FOR LP542 ****

399 INITIALIZE
400 AHEAD IN LABEL
401 BACKWARD IN LABEL
402 SMALL FONT (2x2 mm - LxA)
403 MEDIUM FONT (2x5 mm - LxA)
404 BIG FONT (4x7 mm - LxA)
405 START OF BARCODE 39
406 END OF BARCODE 39

**** BLOCKS FOR TMU295 ****

412 ACTIVATES PAPER PRESENT SENSOR
413 ACTIVATES TIMEOUT
414 RELEASES PAPER
415 EMISSION AND RELEASE OF PAPER
416 SMALL FONT (1,5x3 mm - LxA)
417 MEDIUM FONT (1,5x6 mm - LxA)
418 LARGE FONT (2,5x6 mm - LxA)

**** BLOCKS FOR DOT MATRIX AND THERMAL DP190 PRINTER ****

419 SMALL FONT (1,5x2,5 mm - LxA)
420 MEDIUM FONT (1,5x5 mm - LxA)
421 LARGE FONT (3x5 mm - LxA)
422 BARCODE 39 BEGINNING

**** BLOCKS FOR LX300 ****

423 SMALL FONT
424 MEDIUM FONT
425 LARGE FONT

**** BLOCKS WITH PARAMETERS ****

When entering the following blocks manually in a print ticket, these require that an additional numeric value be entered (specified in detail in the block's description) in order to define the print ticket which one wants to obtain.

EXAMPLE

Entry of the 600 "PRINT n TERMINATORS" block:

- Enter the 600 block in a ticket and confirm with OK/menu.
- The indicator does not pass by the block present in the following line, but shows "P 000".
- Enter a value between 001 and 050; for values outside this interval the indicator shows "-Error-", restoring the block before entering the block 600.
- By entering a valid value, the block will print a number of terminators equal to the one previously entered.

600 PRINTS n TERMINATORS — Values valid from 001 to 050
601 PRINTS n LF CHARACTERS — Values valid from 001 to 050
602 PRINTS n TAB CHARACTERS — Values valid from 001 to 050
603 PRINTS n SPACE CHARACTERS — Values valid from 001 to 050
604 PRINTS n "_" CHARACTERS — Values valid from 001 to 050
605 SETS FONT FOR LP542 — Values valid in the **0mn** format

in which:

m		
1	Font 1	Width 1 (1 mm)
2		Width 2 (2 mm)
3		Width 3 (3 mm)
4	Font 2	Width 1 (2 mm)
5		Width 2 (4 mm)
6		Width 3 (5 mm)
7		Width 4 (7 mm)

n		**Font 1**	**Font 2**
1	Height 1	2 mm	4 mm
2	Height 2	2,5 mm	7 mm
3	Height 3	3 mm	9 mm
4	Height 4	4 mm	11 mm
5	Height 5	5 mm	13 mm
6	Height 6	6 mm	15,5 mm
7	Height 7	7 mm	18 mm

606 LABEL FRONTWARDS OF X POINTS FOR LP542 (1/8 of mm) — Values valid from 001 to 255
607 LABEL BACKWARDS OF X POINTS FOR LP542 (1/8 of mm) — Values valid from 001 to 255
608 LEFT MARGIN FOR LP542 (mm) — Values valid from 001 to 099
609 LEFT MARGIN FOR LX300 — Values valid from 001 to 255

610 NET WEIGHT ON X DIGITS — Valid values in the **nXX** format in which **n** can be:
0 Value with decimal point and spaces
1 Value with decimal point and zeros in the place of spaces
2 Value without decimal point and zeros in the place of spaces

XX is the field length (maximum enterable value is 20); if the weight value is greater than the number of entered digits, the complete value is printed anyways.

################

EXAMPLE

With a weight value of 100.01, if one wants a length of 10 characters, in the three cases one will have:

Parameter	Result
010	100.01
110	0000100.01
210	0000010001

################

611	GROSS WEIGHT ON X DIGITS	Values valid in the **nXX** format
612	TARE WEIGHT ON X DIGITS	Values valid in the **nXX** format
613	PIECES ON X DIGITS	Values valid in the **nXX** format
614	APW ON X DIGITS	Values valid in the **nXX** format
615	NET WEIGHT TOTAL ON X DIGITS	Values valid in the **nXX** format
616	GROSS WEIGHT TOTAL ON X DIGITS	Values valid in the **nXX** format
617	TARE WEIGHT TOTAL ON X DIGITS	Values valid in the **nXX** format
618	WEIGHS TOTAL ON X DIGITS	Values valid in the **nXX** format
619	PIECES TOTAL ON X DIGITS	Values valid in the **nXX** format

LEGEND:

b	indicates a space character (ASCII 32 decimal character).
UM	unit of measure of the active scale (kg, **b**g, **b**t, lb).
+ T	terminator: depending on the setting of the **tErM.** step of the TECHNICAL SETUP, a CR or CRLF or no terminator is added.
XXX*	These blocks do not work without the alibi memory (optional).

7. MOTHERBOARD AND SERIAL OUTPUTS CONNECTION DIAGRAM

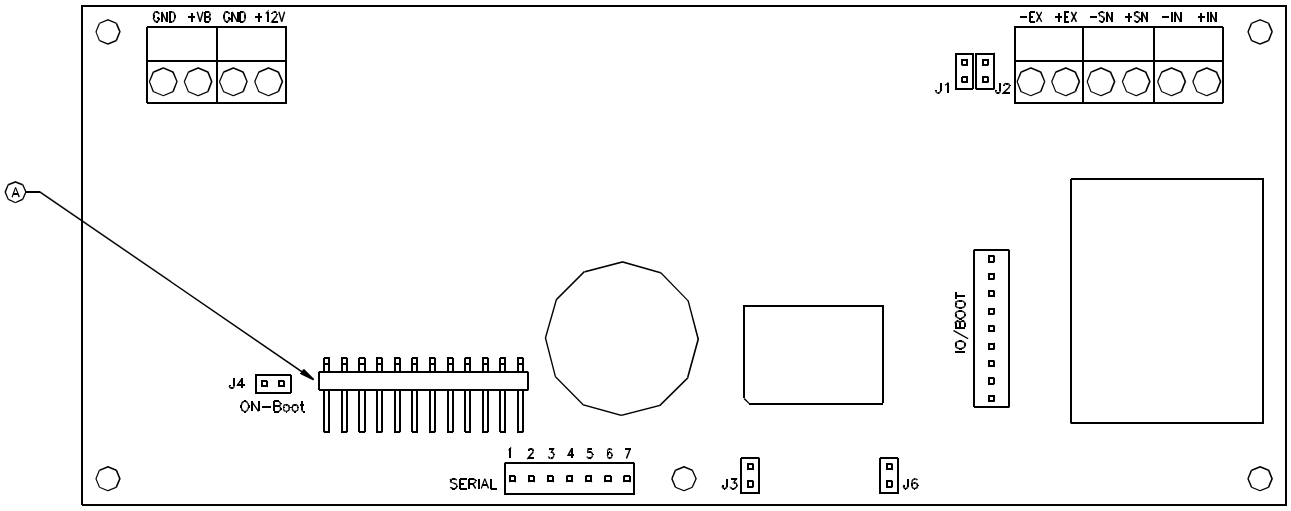

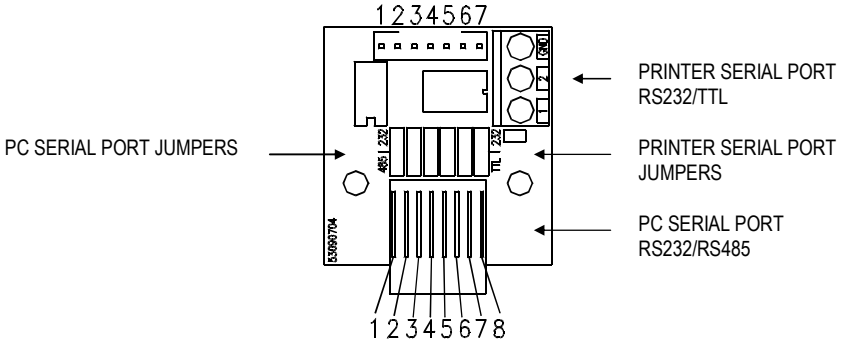

PC SERIAL PORT RS232/RS485
TELEPHONE CABLE

1	N.U.
2	N.U.
3	RX / UX -
4	N.U.
5	GND
6	TX / UX+
7	N.U.
8	N.U.

N.U.: NOT USED

PRINTER SERIAL PORT RS232/TTL
TERMINAL BOARD

1	TX
2	CTS
3	GND

POWER

+12	+12 Vdc
GND	GND 12 Vdc
+VB	+ V BATT (6 Vdc)
GND	GND BATT

CELL RECEIVER OF THE LOAD

-EX	EXCITATION -
+EX	EXCITATION +
-SN	SENSE -
+SN	SENSE +
-IN	SIGNAL -
+IN	SIGNAL +

J1 and J2 JUMPERS

IF CLOSED, REFERENCE + AND POWER SUPPLY +
REFERENCE – AND POWER SUPPLY –
ARE NORMALLY JUMPERS ON THE BOARD

RS232/RS485 PC SERIAL PORT JUMPERS
RS232 closed = RS232 SERIAL
RS485 closed = RS485 SERIAL

RS232/TTL PRINTER SERIAL PORT JUMPERS
RS232 closed = SERIAL RS232
TTL closed = SERIAL TTL

A = CONNECTOR FOR THE KEYBOARD
I/O BOOT = CONNECTOR FOR THE LOADING OF THE SOFTWARE
J4 ON – BOOT = IF CLOSED, ENABLES THE LOADING OF THE SOFTWARE
J3 = IF CLOSED, ENABLES IN CONFIGURATION THE ACCESS TO THE METROLOGICAL PARAMETERS
J6 = LEAVE CLOSED

7.1 I/O OPTIONAL EXPANSION CARD WITH 2 INPUTS AND 2 OUTPUTS

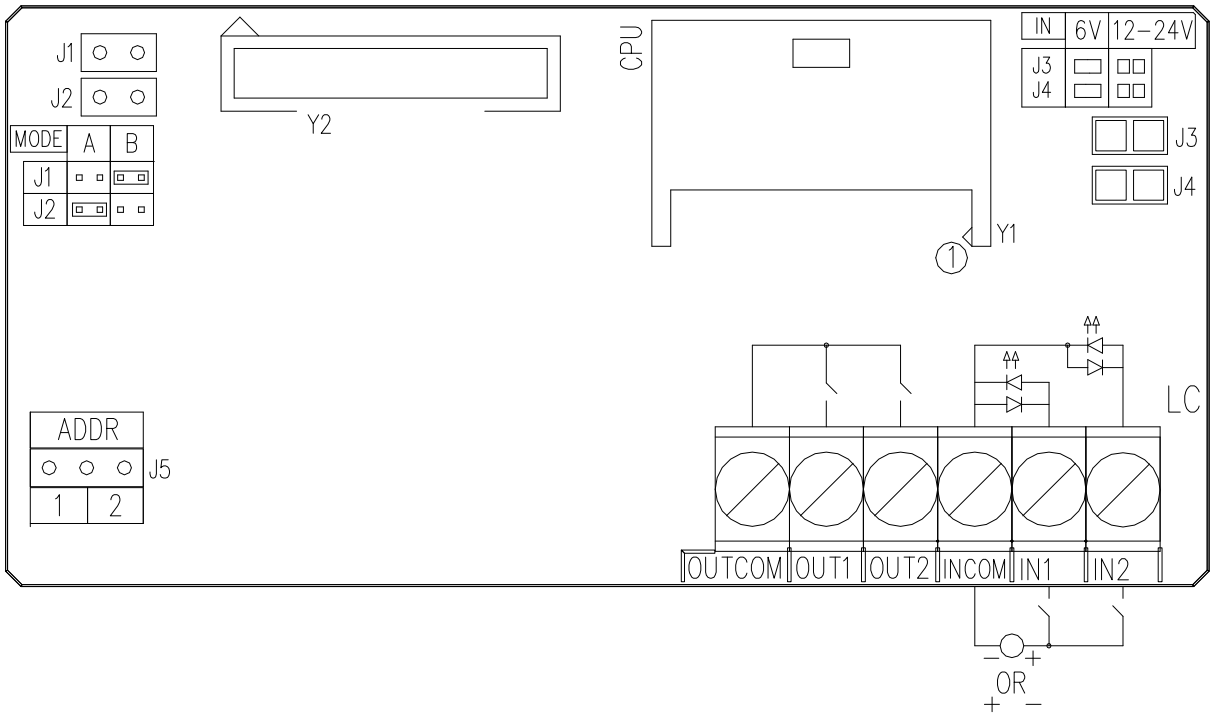

INPUTS (OPTOISOLATOR PHOTOCOUPLERS)
Power supply: 6Vdc (J3 and J4 close); 12 Vdc ÷ 24 Vdc (J3 and J4 open); min 5 mA - max 20 mA.

PHOTOMOSFET OUTPUTS
Maximum power: 48 Vac or 60 Vdc, 150 mA max.

NOTE: Make sure that J1 is close and J2 is open.

It is possible to connect two expansion cards having 2 inputs and 2 outputs each. The first I/O board is connected through a 350 mm cable which connects the BOOT connector (on the indicator board) and the Y1 connector (on the I/O board); the second board instead is connected “in cascade” to the first one with a 350 mm cable (equal to the previous one) which connects the two Y1 and Y2 connectors.
With the jumper J5 in two positions (1 and 2) one selects whether the board should manage inputs 1 and 2 and outputs 1 and 2 (J5 in position 1) or whether it should manage inputs 3 and 4 and relays 3 and 4 (J5 in position 2).

J5	**Management of Inputs and Outputs**
1	IN1, IN2, OUT1, OUT2
2	IN3, IN4, OUT3, OUT4

Therefore the correct configuration with two cascade boards is:
BOARD 1: J5 on 1 (therefore Input 1, Input 2, Output 1, Output 2)
BOARD 2: J5 on 2 (therefore Input 3, Input 4, Output 3, Output 4)

The inputs will be put outside the instrument with a 12 X 0,5 mm multipolar cable connected in this way:

MEANING	**COLOUR**
OUT1	WHITE
OUT2	GREY
OUTCOM (common outputs)	BLACK
IN1	RED
IN2	BLUE
INCOM (common input)	BROWN
+ VE (+12 Vdc)	WHITE - GREEN
- VE (GND)	WHITE - BROWN
ONLY WITH SECOND CONNECTED I/O CARD:	
OUT3	PINK
OUT4	GREEN
IN3	YELLOW
IN4	PURPLE

The optoisolation of the inputs is not correct anymore if these are activated with a voltage available on the indicator (for example the VE); an external voltage must be used instead. However, for convenience the VE of the indicator is brought onto the multipolar cable.

!!!WARNING!!!

Be careful not to shortcircuit the wires of the VE (WHITE – BROWN and WHITE – GREEN whires) since this would cause permanent damages to the electronic card.